GROUP 40

CONTENTS

STANDARDS AND PRECAUTIONS FOR OPERATIONS ON ELECTRICAL SYSTEM 40-1/2
HOW TO READ THE WIRING DIAGRAM 40-2
- Power supply distribution diagram 40-2
- Wiring diagram 40-2

POWER SUPPLY DISTRIBUTION 40-5
- Power supply distribution diagram 40-5
- Fuses 40-6
- Ignition switch 40-8

ELECTROMECHANIC DEVICES AND INTERMITTENCES 40-9
- Relays 40-9
- Timers and intermittences 40-12

LIGHTING SYSTEM 40-14
- Lamps 40-14
- Combination switch unit 40-16
- External lighting-front side 40-21
- External lighting-rear side 40-22
- Front combination lamps 40-24
- Side repeaters 40-26
- Rear combination lamps 40-27
- Rear refractive strip and number plate lights 40-28
- Fog lights and rear fog lights 40-29
- Fog lights and rear fog lights (CH) .. 40-30
- Inside lighting 40-33
- Lamps under rheostat 40-35

SENSOR AND SENDERS 40-39
- Engine cooling down, lubrication, and brakes and clutch liquid level 40-39
- Fuel supply 1.6 1.8 2.0 40-41
- Fuel supply 6V iniezione 40-43
- Fuel supply, rev. counter and tachymetric switch 2.0 turbodiesel 40-44

WINDSCREEN WASH/WIPE AND HEADLIGHT WASHER 40-47
- Windscreen wiper 40-49
- Windscreen and head-light washers 40-51

ELECTRIC ACCESSORIES 40-53

CONTENTS (Cont.)

Horns and heated rear window 40-53
Horns 40-54
Heated rear window 40-55
Power windows 40-57
Door-lock device 40-59
Door-lock control unit 40-61
Door-unlock switch 40-61
Car radio, clock and cigar lighter 40-62
Front cigar lighter 40-63
Rear cigar lighter 40-63
Clock 40-64
Tow hook 40-65
WARNING LAMP PANEL 40-67
ELECTRONIC DEVICES 40-69
ALFA ROMEO Control 40-69
Trip Computer
2.0 40-72
Trip Computer
✱ 6V iniezione 40-73
Performance Gauge
1.6 1.8 40-76
WIRING 40-79
Engine compartment wiring
1.6 1.8 2.0 40-79
Engine compartment wiring
2.0 turbodiesel 40-80
Engine compartment wiring
✱ 6V iniezione 40-81
Passenger and rear compartment wiring (All models) 40-82
Dashboard wiring - passenger compartment side (All models) 40-83
Dashboard wiring - engine compartment side (All models) 40-84
Fusebox pin-out 40-84/1
FUNCTIONAL DIAGRAM
1.6 1.8 2.0 40-85
2.0 turbodiesel 40-86
✱ 6V iniezione 40-87
KEY TO WIRING DIAGRAMS 40-89
VARIATIONS
1.8 2.0 CH SWE 40-94
Ignition control unit 40-94
Timing variator relay 40-94
Coolant temperature switch 40-94
R.P.M. - activated microswitch 40-95
Idle/coast switch 40-95

To read the electric diagrams related to:

- **INJECTION L-JETRONIC (✱ 6V iniezione) refer to: WORKSHOP MANUAL - Petrol engines - Group 04.**
- **IGNITION, STARTING, CHARGING SYSTEM 1.6 1.8 2.0 ✱ 6V iniezione refer to: WORKSHOP MANUAL - Petrol engines - Group 05.**
- **STARTING, CHARGING SYSTEM 2.0 turbodiesel refer to: WORKSHOP MANUAL turbodiesel 2.0 (intercooler) - Group 05.**

N.B. Updating of wiring diagrams relating to model 75 are not available at the time when going to press.

STANDARDS AND PRECAUTIONS FOR OPERATIONS ON ELECTRICAL SYSTEM

The electronic control units installed on the vehicle are built with components capable of withstanding the electrical loads of the system to which they belong. Consequently every system modification may directly damage the control units. For example, the control unit may supply the relay coil, but it certainly cannot directly supply the electrical loads connected to the relay's contact. Great care must also be taken over the electrical power supply polarities, in that the control unit protection is included in the power supply system and not on the input and output connections. When installing electrical accessories on the car, it is always advisable to disconnect the electrical control units during installation and to carry out the functional checks on the accessories with the control units disconnected. In any case, it is highly inadvisable to connect from the control units wiring.

The following precautions must therefore be taken:

- **Do not connect the control unit output directly to the load.**
- **Under no circumstances operate directly on devices with wires connected to "positive" or to "ground", without having previously disconnected the control unit.**
- **Do not short-circuit the system sensors, except when this is allowed or specified in the "Workshop Manual".**

The possible consequences of operating on the systems must always be anticipated to avoid the risk of damage. Whenever not all the technical data of the components concerned is perfectly known, operations should be avoided altogether.

HOW TO READ THE WIRING DIAGRAM

WARNING:
Before starting the operations, make sure that the ignition key is in the "ST" position, and the battery ground cable disconnected. At the end of operations, and after having reconnected the battery, proceed to initialize the Trip Computer, where present (refer to: Group 43 - Electronic Devices - Trip Computer).

For detection of failures present in the electric circuits, the following types of diagrams are available.

POWER SUPPLY DISTRIBUTION

This type of diagram is helpful in the identification of specific troubles related to the part of electric diagrams concerning supply; e.g.: the windscreen wiper failes to operate. A first check shows that the instrument supply is efficient.

From the distribution diagram, it can be noted that the supply of both instrument and windscreen wiper are realized via ignition switch and fusebox. The result is then that the ignition switch operates correctly and no failure is present along the wiring between battery and switch itself. The failure must then be due either to fusebox (see: Fuses - Services protected by Fuses) or to the following parts of the electric system, that is, in the wiring, in the windscreen wiper or in the ground connection. For the fault identification, refer then to the windscreen wiper wiring diagram.

WIRING DIAGRAM

For each load, the diagram allows the following to be identified: the type and number of connectors, the components, the terminal positions inside the connectors, color coding of wires, and connector codes. Besides, for those cases where the different car versions involve variations of the electric diagram the wiring diagram sets in evidence each variation by properly dividing the part of the circuit concerned.

SYMBOLS

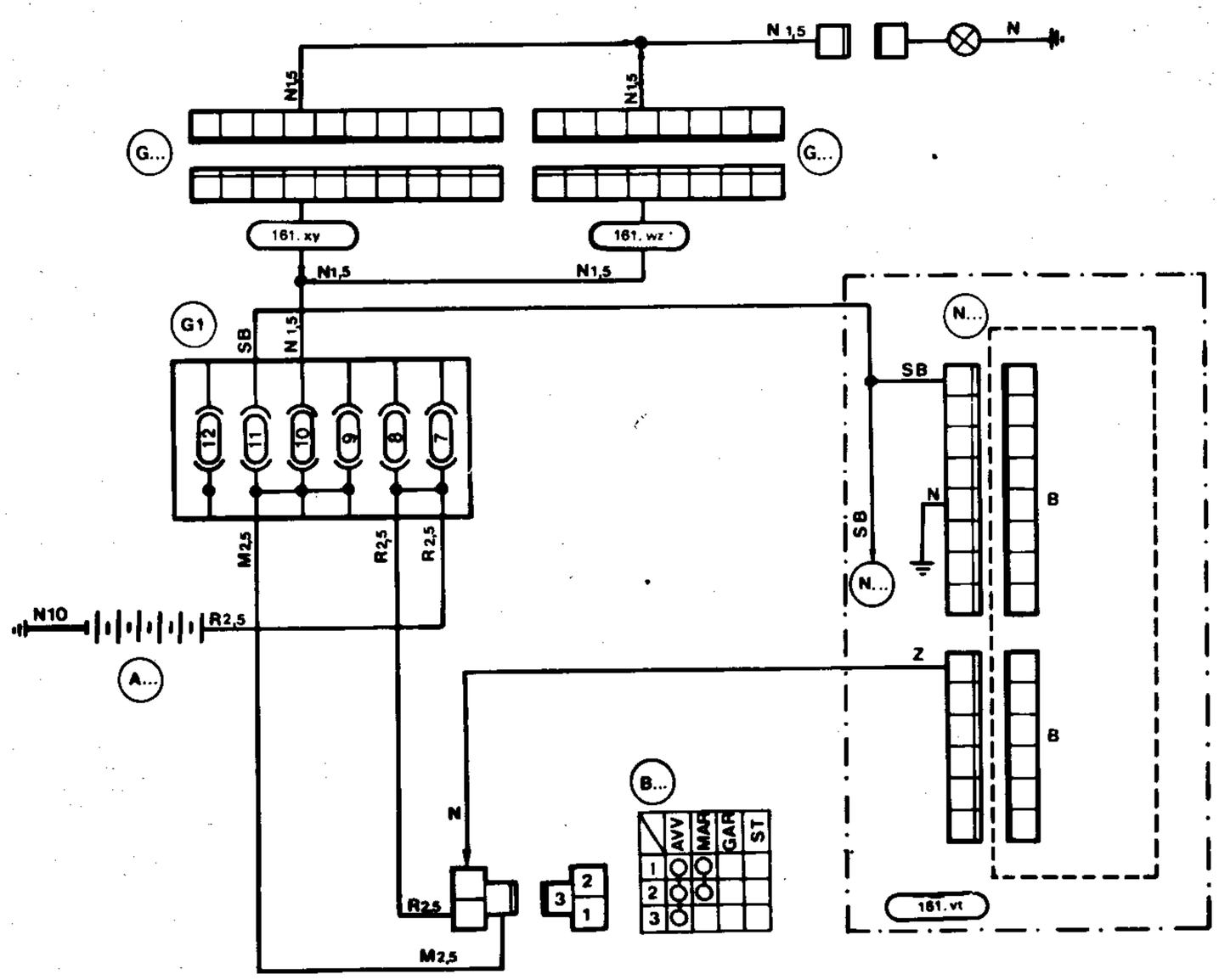

COMPONENTS IDENTIFICATION

In the wiring diagrams, each component is identified by a reference designation composed of a letter and a number (e.g. **E7**). The letter identifies the component type, according to the following symbols:

- **A** Start - recharge
- **B** Manual electric controls
- **C** Board instruments
- **D** Lamp indicators
- **E** Outside lights
- **F** Inside lights
- **G** Fusebox - connector - grounds
- **H** Switches
- **I** Relays
- **L** Transmitters
- **M** Electromagnets - solenoid valves
- **N** Electronic devices - intermittences - timers
- **O** Ancillary equipment
- **P** Motors
- **Q** Air ventilation - conditioning
- **R** Safety devices
- **S** Electronic injection

The reference designation can be followed by a capital or small letter:

- the capital letter (i.e. $^{G95}_{Q}$) identifies only the fuse box connectors
- the small letter (i.e. $^{G46}_{a}$) identifies the connectors having same reference number but different functions.

To identify each component, refer to "Key to Wiring Diagrams".

Variations

Each wiring diagram is applicable for several models of the Alfa 75 range. Any variation between each model, is emphasized by the following symbols:

- the chain line, on wiring diagram, delimits those areas containing the specific variations for the models indicated with "161.xy".

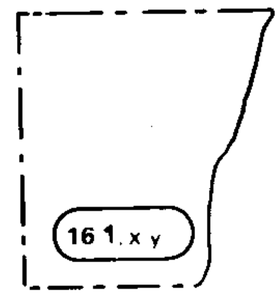

- the connection identifies two wiring variations, which are present in alternative and connected to the same point. The wiring variations refer to the models indicated with the symbols "161.xy" and "161.wz" respectively.

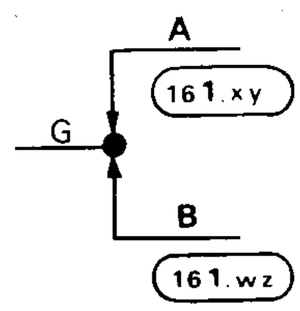

The models of the Alfa 75 range are identified through the following table:

161.00 (*)	Alfa 75	1.6	lhd
161.01	Alfa 75	1.6	rhd
161.02	Alfa 75	1.8	lhd
161.03	Alfa 75	1.8	rhd
162.08	Alfa 75	2.0	lhd
162.09	Alfa 75	2.0	rhd
161.04	Alfa 75	2.0	turbodiesel
161.18	Alfa 75	❋ 6V iniezione	lhd
161.19	Alfa 75	❋ 6V iniezione	rhd

(*) The wiring diagrams related to model **1.6 lhd** are the same as those related to model **1.8 lhd**.
Therefore, unless specific indications, they will be identified, for both models, with the single number **161.02**, related to the greater displacement model

Optionals

The components mounted upon request are enclosed by a short dashes line.

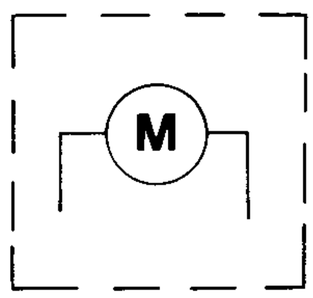

Switches

They are shown through a table. The table simulates the switch and shows, in the horizontal plane, the positions of the control or switch to be operated and, in the vertical plane, the terminals between which the continuity is generated.

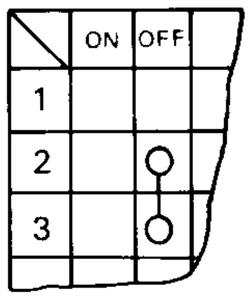

In the example below, the continuity is present between terminals 2 and 3, with the control set to position ON.

Connectors

The figure shows the type of diagram used to identify the two connectors related to each junction: for the male connector diagram (m) is applicable, for the female connector, diagram (f) is applicable.

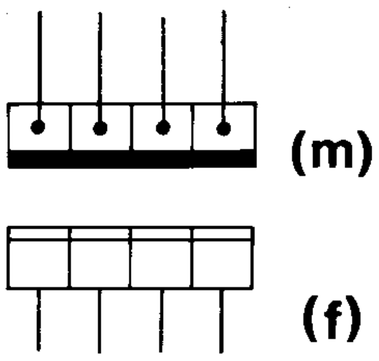

Cables

The indication referring to both colour and section of cables, is provided in proximity to the end of each cable.

a. Cable colours

- **A** Light blue
- **AB** Light blue - white
- **AG** Light blue - yellow
- **AN** Light blue - black
- **AR** Light blue - red
- **B** White

BN	White black
BR	White red
BL	Blue
BLN	Blue black
BLR	Blue red
Br	Dark brown
C	Orange
CB	Orange white
CN	Orange black
G	Yellow
GB	Yellow white
GN	Yellow black
GR	Yellow red
GV	Yellow green
H	Grey
HG	Grey yellow
HN	Grey black
HR	Grey red
HV	Grey green
M	Brown
MB	Brown white
MG	Brown yellow
N	Black
NZ	Black purple
No	Hazel brown
R	Red
RN	Red black
S	Pink
SB	Pink white
SN	Pink black
V	Green
VB	Green white
VN	Green black
Z	Purple
ZB	Purple white
ZN	Purple black

In the event of mixed colour, the base colour is indicated first, followed by the stripe colour.
Ex.: BN = White with Black stripes.

b. Cables section

The number following the cable colour indication, identifies the section in mm^2.

Note
The cable section not indicated, is 0.5 mm^2 (0.00078 in^2).

E.g. **BN 1.5** = white cable with black stripes, having **1.5 mm^2 (0.00234 in^2)** section.

POWER SUPPLY DISTRIBUTION

POWER SUPPLY DISTRIBUTION DIAGRAM

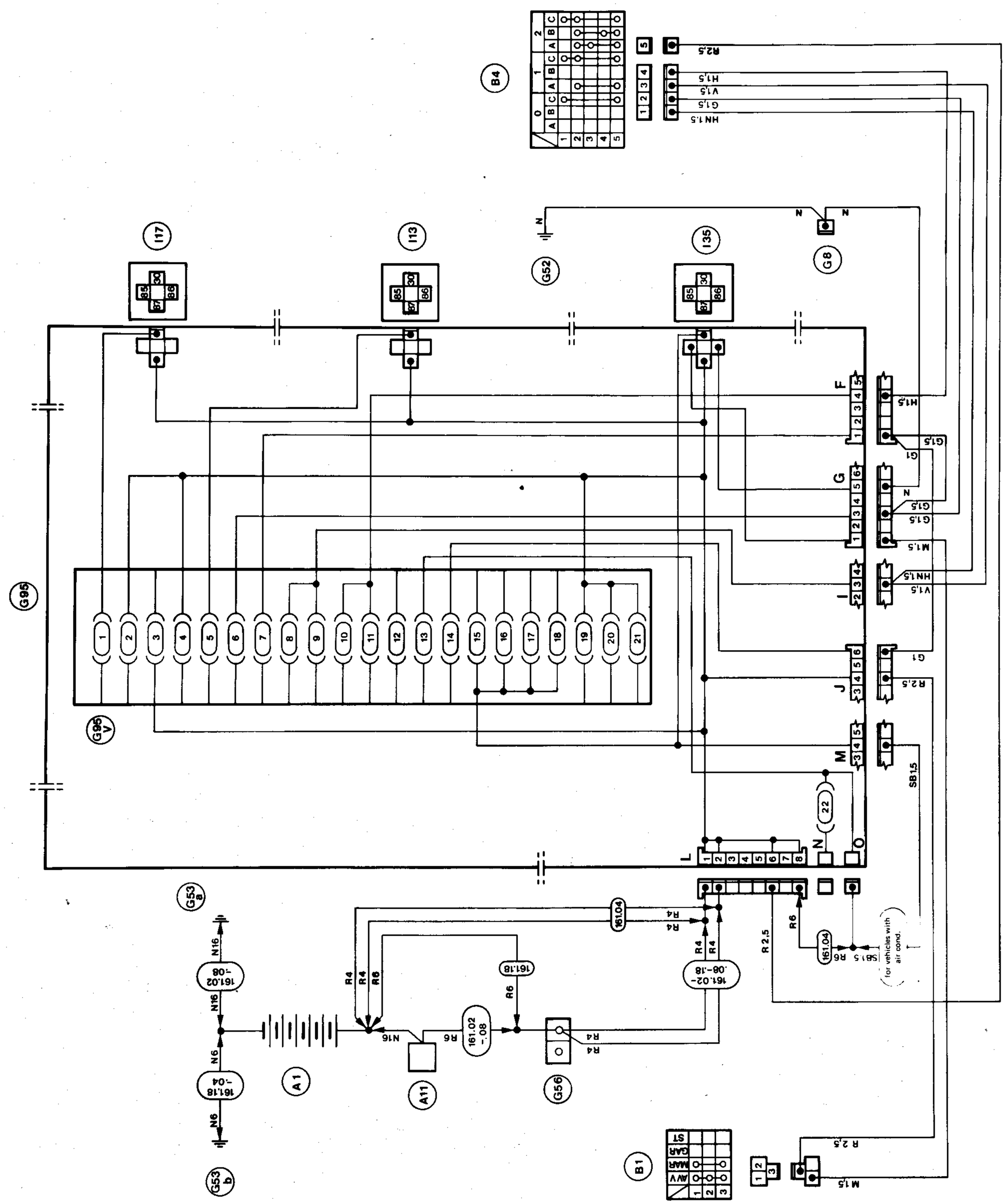

FUSES

CAUTION:

a. Should a fuse blow, before replacing it, make sure that the cause of failure has been removed.
b. Use only fuses having same amperage. Do never use fuses having amperage greater than that prescribed.
c. Insert the fuse correctly into its housing.

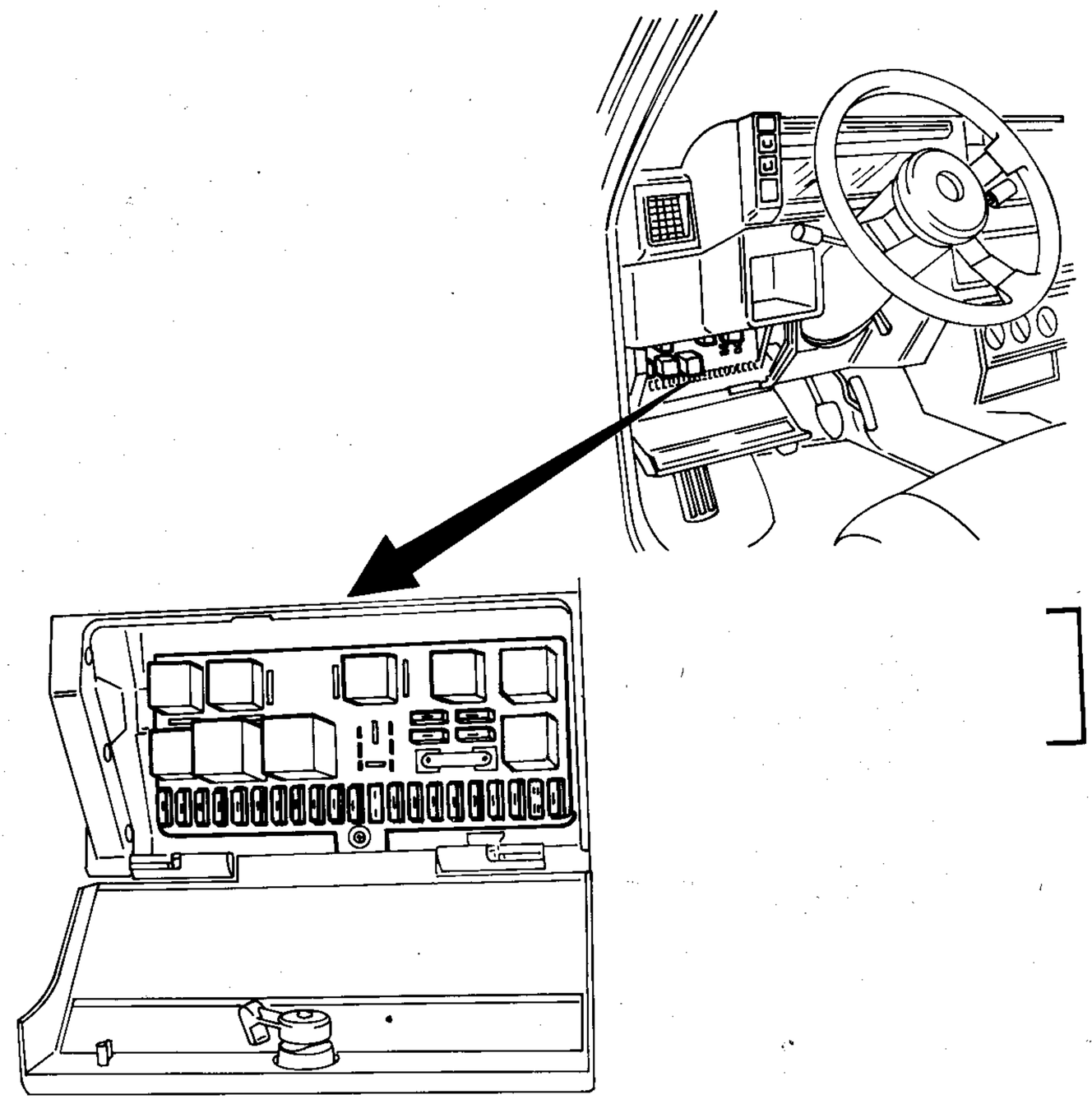

LOCATION

The fuses are arranged on the central fusebox, located in the special drawer of dashboard, on the left of the steering wheel column. In a few models, free fuses are inserted in the electric system for particular loads. Their location and the protected services, are described in the chapters related to the specific loads.
On the fusebox, four housings have been obtained for the spare fuses.

SERVICES PROTECTED BY FUSES

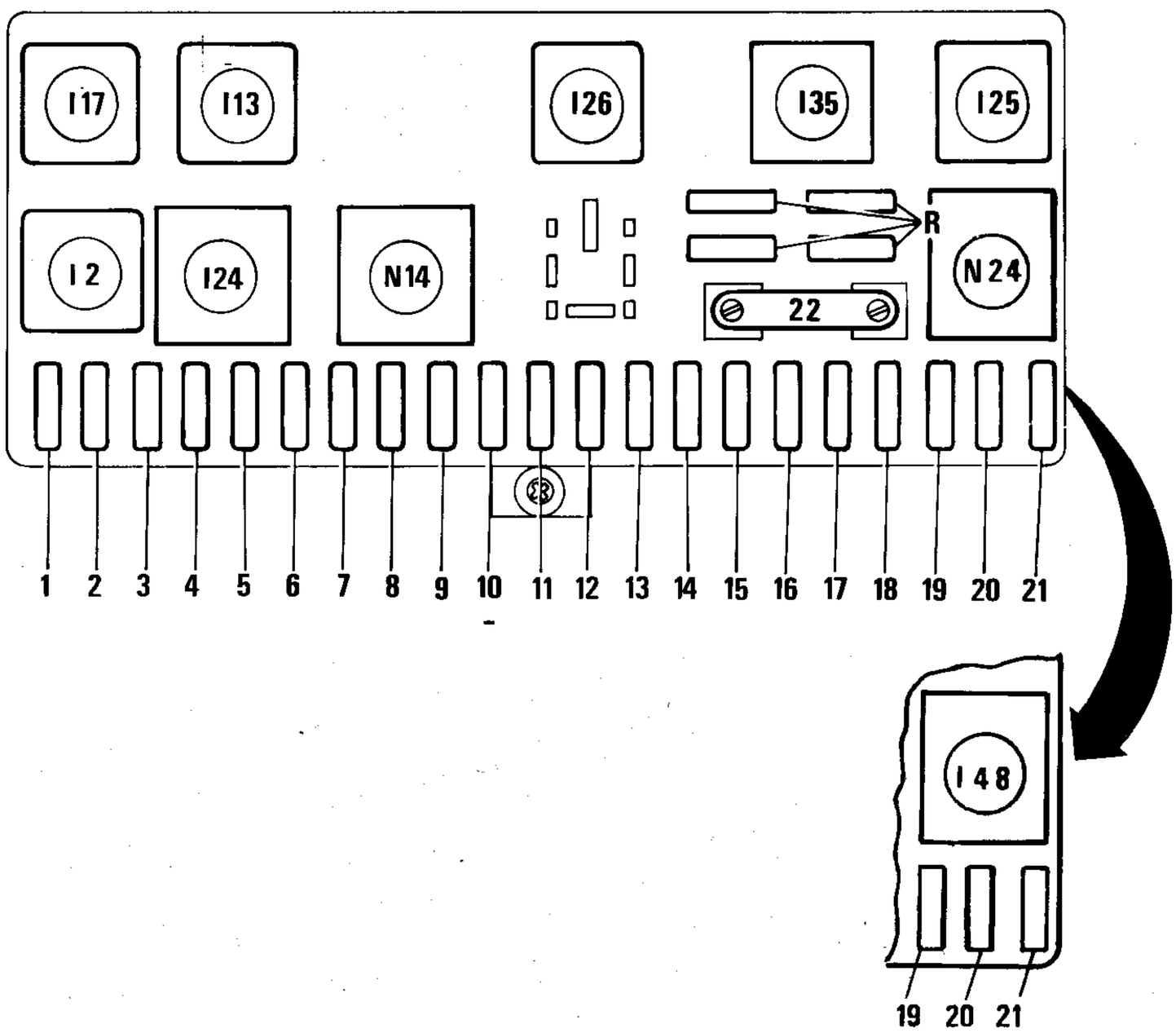

R: Spare fuses

I2 Heated rear screen relay
I13 Rear power window relay
I17 Foglight relay
I24 Side/Hazard lights relay
I25 Rear fog light relay
I26 Roof lamp relay
I35 Key operated supply relay
I48 Ignition switch-operated relay for ALFA ROMEO Control and instruments
N14 Windscreen wiper intermittence
N24 Pulse converter for Trip Computer models: 6V iniezione

For models 75 only

The following table specifies, for each model, the services which are protected by each fuse.

Table "Fuses"

Fuse Number	Service Protected	Ampere	Model								
			1.6		1.8		2.0		2.0	6V	
			LHD	RHD	LHD	RHD	LHD	RHD	T.D.	LHD	RHD
1	Fog light	15	○	○	○	○	○	○	○	○	○
2	Door lock	25 (△) 10 (▲)	X	X	X	X	X	X	X	X	X
3	Heated rear window	20	X	X	X	X	X	X	X	X	X
4	Headlight washer	20	●	●	●	●	●	●	●	●	●
5	Rear power window	25	●	●	●	●	X	X	●	●	●
6	Front left and rear right side lights	7,5	X	X	X	X	X	X	X	X	X
7	Front right and rear left side lights	7,5	X	X	X	X	X	X	X	X	X
8	Left full beam	7,5	X	X	X	X	X	X	X	X	X
9	Right full beam	7,5	X	X	X	X	X	X	X	X	X
10	Right low beam	10	X	X	X	X	X	X	X	X	X
11	Left low beam	7,5	X	X	X	X	X	X	X	X	X
12	ALFA ROMEO Control Ignition switch-operated relay I48	10	X	X	X	X	X	X	X	X	X
13 (*)	Electric fuel pump	7,5 (△) 15 (▲)	(1)	(1)	(1)	(1)	(1)	(1)	X	X	X
14	Instruments lighting	7,5	X	X	X	X	X	X	X	X	X
15	+ 15 V switches	15	X	X	X	X	X	X	X	X	X
	Cluster lighting		X	X	X	X	X	X	X	X	X
	Clock		X	X	X	X	–	–	X	X	X
	Trip computer		–	–	–	–	X	X	–	●	●
	Windscreen wash/wipe		X	X	X	X	X	X	X	X	X
16	Heater	20	X	X	X	X	X	X	X	X	X
17	Reverse light switch + 15 V roof switches Rear cigar lighter Sun roof (**)	15	X	X	X	X	X	X	X	X	X

○ Available as spare part

● Optional

X Standard

T.D. turbodiesel

(*) Except for 6V 3.0

(**) For 6V 3.0 only

(△) For models Alfa 75 only

(▲) For models 75 only

(1) Only for vehicles with air-conditioner

Table "Fuses" (continued)

Fuse Number	Service Protected	Ampere	Model 1.6 LHD	1.6 RHD	1.8 LHD	1.8 RHD	2.0 LHD	2.0 RHD	2.0 T.D.	6V LHD	6V RHD
18	Front power windows	25	X	X	X	X	X	X	X	X	X
19	Passenger compartment roof lamp-passenger compartment spot light	15	X	X	X	X	X	X	X	X	X
	Clock - Fusebox lamp		X	X	X	X	X	X	X	X	X
	Car radio - electric aerial		○	○	○	○	○	○	○	○	○
	Direction indicators		X	X	X	X	X	X	X	X	X
20 (*)	+ 30 V possible service	15 (△) 20 (▲)									
21	Stop lights	15	X	X	X	X	X	X	X	X	X
	Front cigar lighter		X	X	X	X	X	X	X	X	X
22	Pre - heating glow plugs	50	–	–	–	–	–	–	X	–	–

			75 6V 3.0 LHD	75 6V 3.0 RHD
13	+ 15 V coil of multi-function relay for electronic injection unit	15	X	X
20	Electronic injection control unit + 30 V Fuel pump Rear window wiper	20	X	X

(*) Except for 75 6V 3.0
○ Available as spare part
● Optional
X Standard
T.D. turbodiesel

(△) For models Alfa 75 only
(▲) For models 75 only

IGNITION SWITCH

REMOVAL AND INSTALLATION

For removing and installing the ignition switch unit refer to: WORKSHOP MANUAL - **mechanical units** - Group 23 - Steering Wheel and Column.

CHECK

Check the ignition switch functioning verifying that the electric continuity between terminals occurs in compliance with the indications shown in the Table.

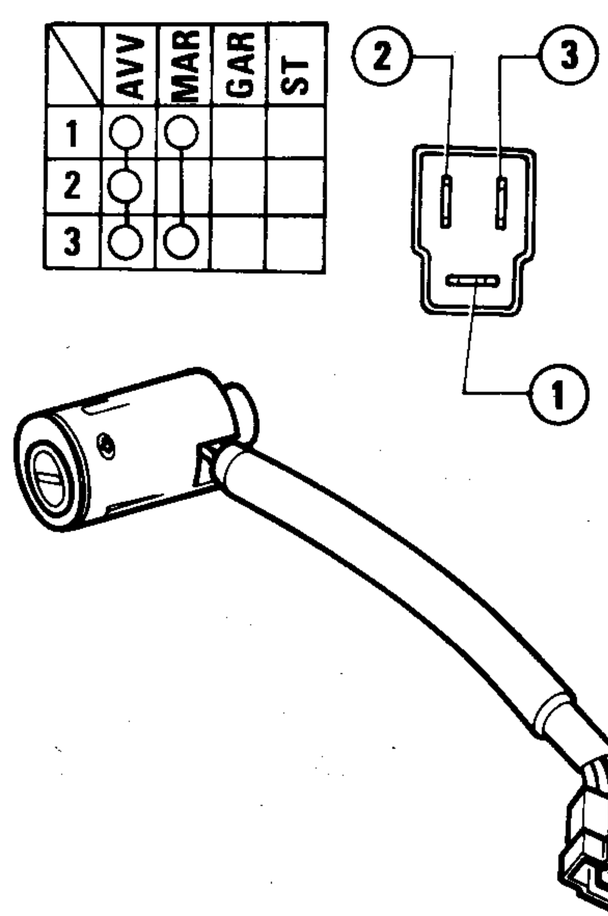

ELECTROMECHANIC DEVICES AND INTERMITTENCES

RELAYS

LOCATION

The relays are positioned as follows:
- on the central fusebox
- on the boards housed in the front right-hand and left-hand corners of engine compartment.

For locating each device, refer to the following figure, with the aid of table "Relays".

CHECK

Verify that relays are in conformity with the type shown in table "Relays".

Location

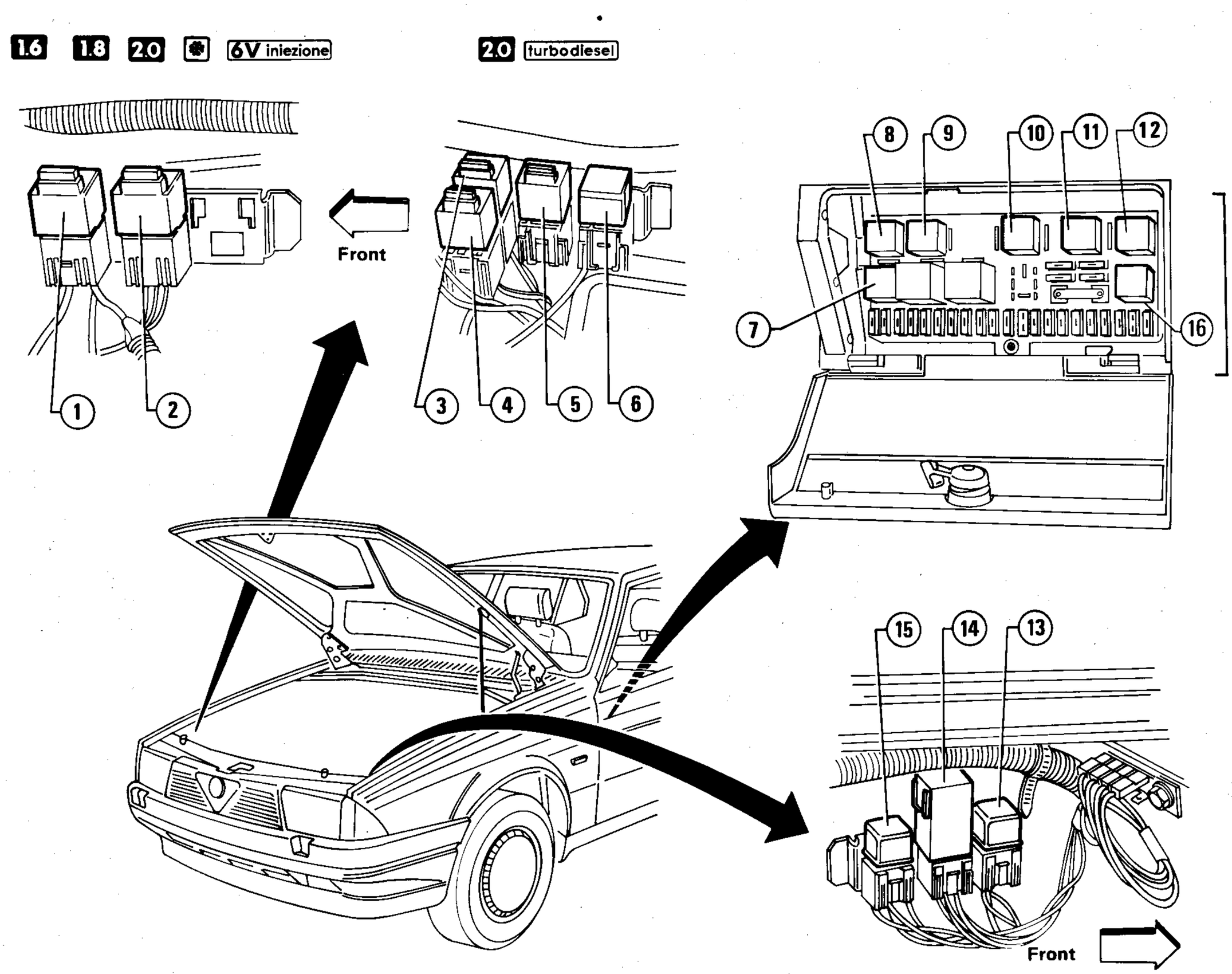

Table "Relays"

Component			Vehicle	External view	Internal diagram	Symbols
Name	Ref Des.	Posit.				
Horns relay	I 3	13	All vehicles	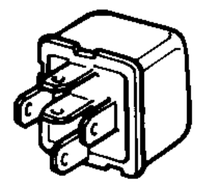	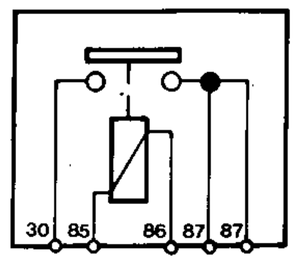	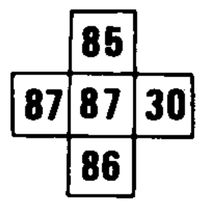
Engine cooling fan relay	I 1	1	1.6 1.8 2.0 ❄ 6V iniezione	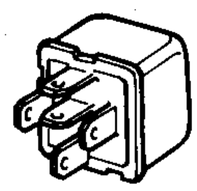	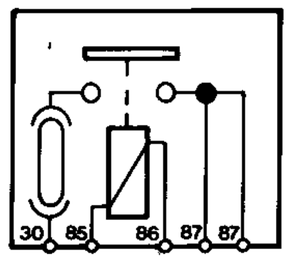 NOTE: a 30 A fuse is used	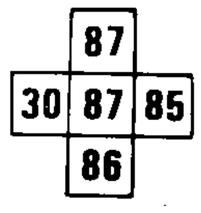
		3	2.0 turbodiesel			
Relay for compressor electromagnetic coopling (vehicles with air conditioner)	Q 17	2	1.6 1.8 2.0 ❄ 6V iniezione	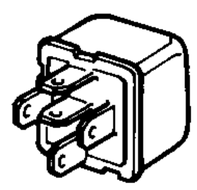	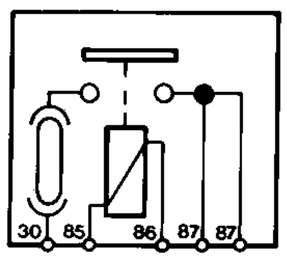 NOTE: a 10 A fuse is used	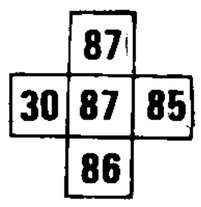
		4	2.0 turbodiesel			
Supplementary engine cooling fan relay	I 23	5	2.0 turbodiesel	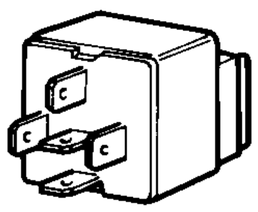	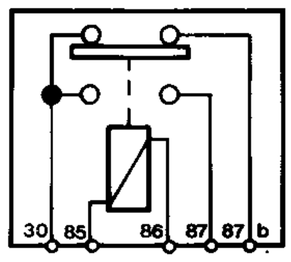	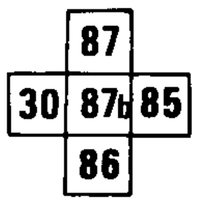
Key - operated supply relay (1) NOTE: the relay serves to control the following: – cluster warning lamps – A.R. Control – Window wipers – Power window motor	I 35	11	All models	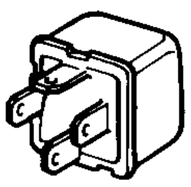	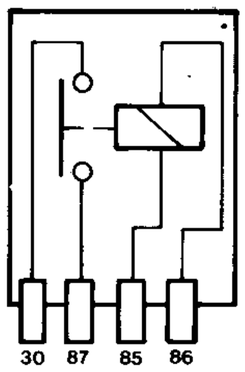	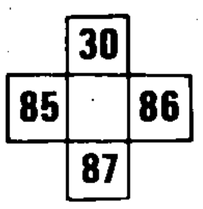

(1) The engine starts even if the relay is faulty but the services it controls can no longer be activated.

Table "Relays" (continued)

Component			Vehicle	External view	Internal diagram	Symbols
Name	Ref Des.	Posit.				
Foglight relay	I 17	8	All vehicles		30 87 86 85	86 / 30 87 / 85
Rear fog light relay	I 25	12	1.6 * 1.8 * 2.0 * 6V iniezione * 2.0 turbodiesel *		87 30 87 85 86	86 / 30 87 87 / 85
Heated rear screen relay	I 2	7	All vehicles		30 87 85 86	87 / 86 87 85 / 30
Passenger compartment roof lamp relay	I 26	10	All vehicles		87 86 30 87 85	86 / 30 87 87 / 85
Rear power window relay	I 13	9	1.6 ** 1.8 ** 2.0 ** 6V iniezione 2.0 turbodiesel **		86 85 87 30	86 / 30 87 / 85

* For Switzerland only

** Optional

Table "Relays" (continued)

Component			Vehicle	External view	Internal diagram	Symbols
Name	Ref Des.	Posit.				
Starter inhibitor relay	I 10	6	2.0 turbodiesel	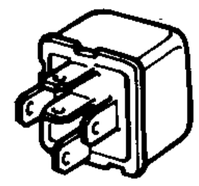	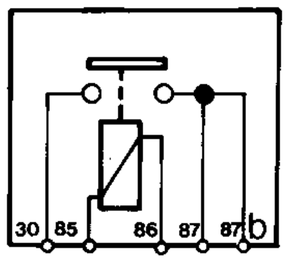	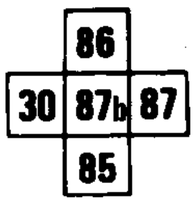
Brake liquid level switch relay	I 14	15	2.0 ✱ 6V iniezione	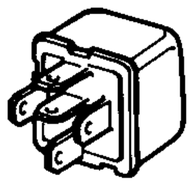	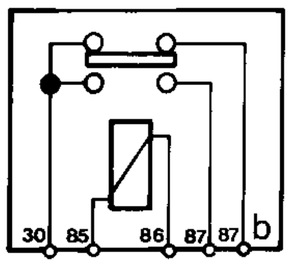	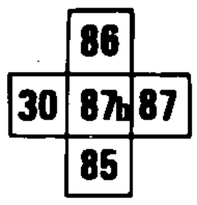
Headlight wiper timer	N 12	14	All vehicles	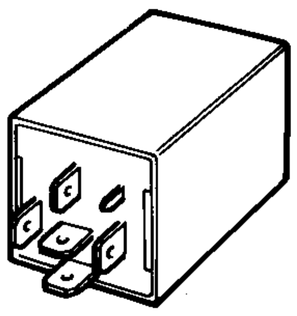	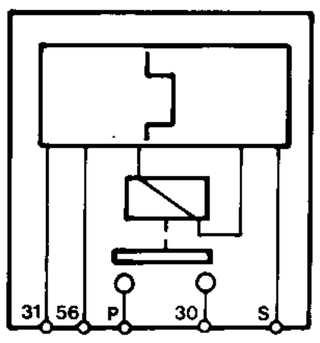	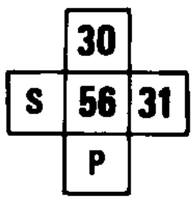
Ignition switch-operated relay for ALFA ROMEO Control and instruments	I 48	16	All vehicles	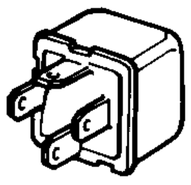	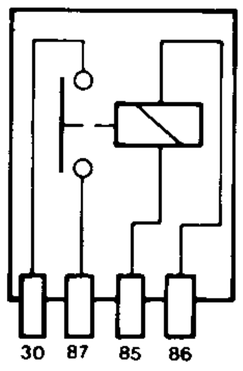	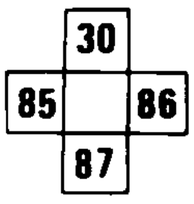

TIMERS AND INTERMITTENCES

LOCATION

Timers and intermittences are located on the central fusebox. To locate the various devices, refer to the following figure with the aid of table "Timers and Intermittences".

CHECK

Verify that timers and intermittences are in accordance with the type shown in table "Timers and Intermittences".

Location

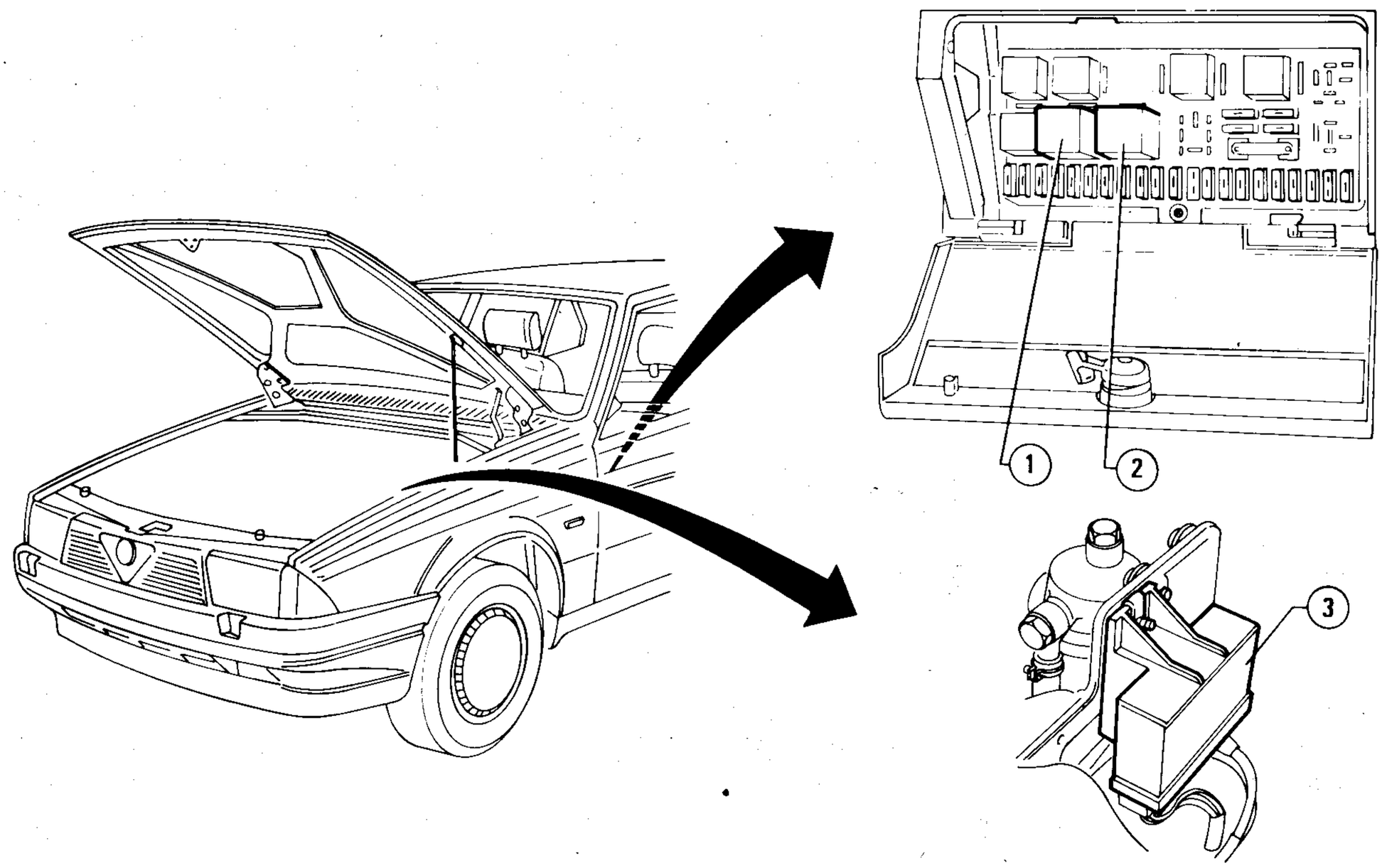

Table "Timers and Intermittences"

Component			Vehicle	External view	Internal diagram	Symbols
Name	Ref Des.	Posit.				
Electronic windscreen wiper intermittence	N 14	2	All vehicles	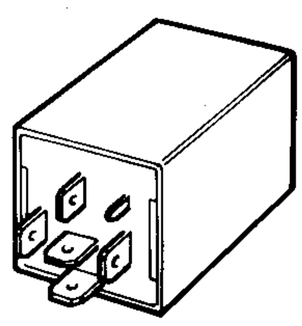	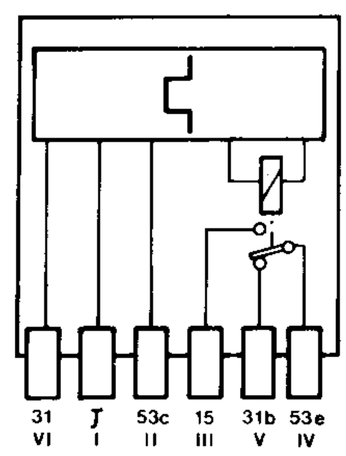	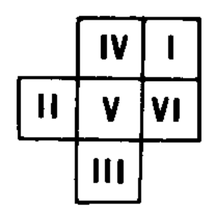
Pre - heating glow - plug timer	N 6	3	2.0 turbodiesel	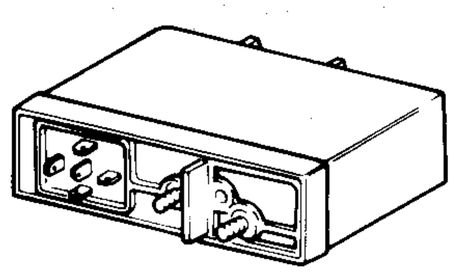	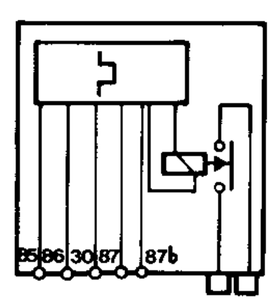	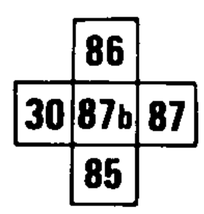

Table "Timers and Intermittences" (continued)

Component			Vehicle	External view	Internal diagram	Symbols
Name	Ref Des.	Posit.				
Side/hazard lights intermittence	I 24	1	All vehicles	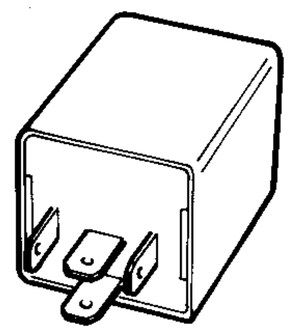	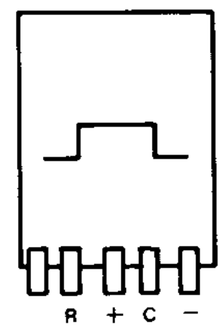	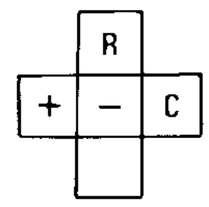

LIGHTING SYSTEM

WARNING:
Before starting the operations on the lighting system, make sure that the ignition key is in the "ST" position, and the battery ground cable disconnected.

LAMPS

TYPES OF LAMPS

CAUTION:
When replacing the lamps, use the original type supplied by ALFA ROMEO.

The lamps used for the vehicle are of five types; remove them by following the below procedure.

1. Halogen lamp - type A

To remove it from lampholder, detach the connector, remove the retaining spring and withdraw it taking the utmost care to prevent touching it with bare hands.

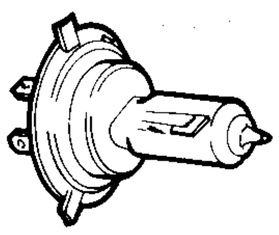

2. Halogen lamp - type A'

It is secured to lampholder by two contact clips and two fixed points. Withdraw it from lampholder by removing the two contact clips and release it from the fixed points. Take the utmost care to prevent touching it with bare hands.

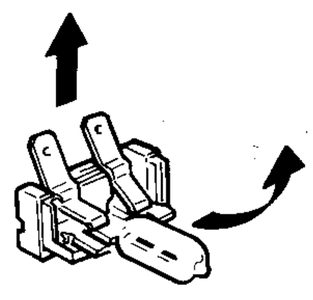

3. Bayonet lamp - type B

To remove it from lampholder, press the bulb, rotate it counterclockwise, then withdraw it.

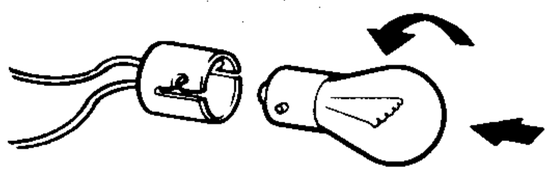

4. Cylindrical lamp - type C

To remove it from lampholder, release it from the contacts by pulling towards lampholder outside.

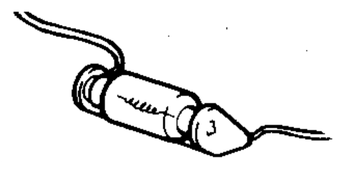

5. All-glass lamp - type D

It is pressed in the lampholder, remove it by pulling the bulb towards lampholder outside.

Install the lamps by reversing the order of removal.

Table "Lamps"

The lamp features (type and electric power absorbed) are listed in the following table.

Lamps	Electric Power (W)	Type
Front combination lamps:		
– Low/full beam (halogen lamp)	55/60	A
– Front sidelight	5/21	D
– Front direction light	21	B
Fog lamp	55	A
Direction side indicator lamp	5	D
Rear combination lamps:		
– Rear direction light	21	B
– Rear sidelight	5	B
– Stop light	21	B
– Rear fog light	21	B
Reverse lamp	21	B
Number plate lamp	21	B
Cluster warning lamps	1.2	D
Cluster lighting lamps	1.2	D
Roof lamps	4	C
Spot lamps	5	D
Cigar lighter lamps	1.2	D
Engine compartment lamp	4	C
Luggage compartment lamp	4	C
ALFA ROMEO Control lighting lamps	1.2	D
Trip Computer lighting lamps	1.2	D

COMBINATION SWITCH UNIT

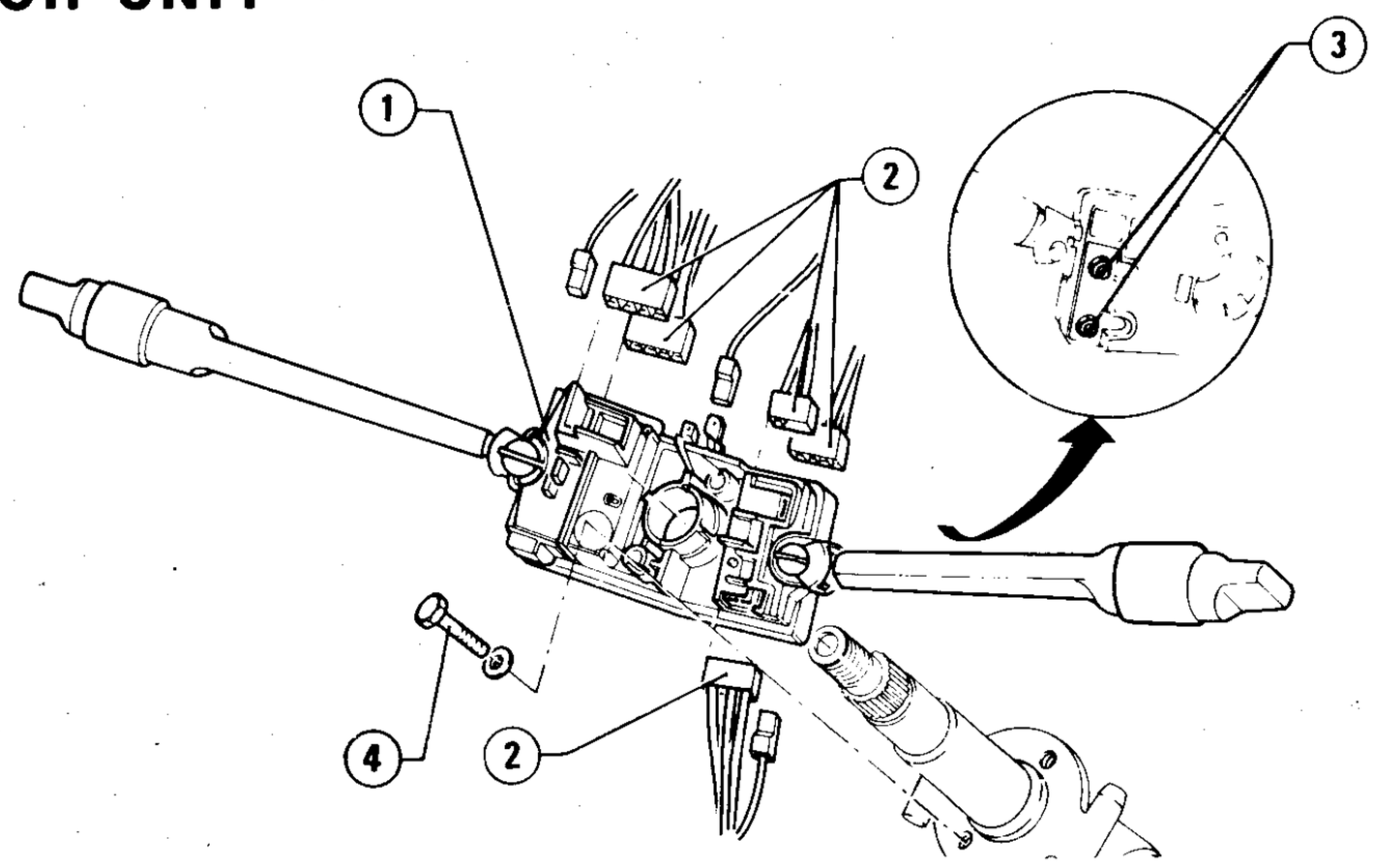

1 Combination switch
2 Connectors
3 Nuts
4 Screw

REMOVAL

1. Remove the steering wheel (refer to: WORKSHOP MANUAL - **mechanical units** - Group 23 - Steering Wheel and Column).

2. Unscrew the six **securing screws** and remove both lower and upper fairing of steering column (refer to: WORKSHOP MANUAL - **mechanical units** - Group 23 - Steering Wheel and Column).

3. With reference to the exploded view, detach connectors (2) of the combination switch unit.

4. Remove the combination switch unit unscrewing the two screws (1) securing it to the steering column. If necessary, disassemble the combination switch and separate the two levers by operating on nuts (3).

CHECK

Check for good conditions of wiring. Verify proper functioning of combination switch by checking, with a tester, that continuity between terminals is in compliance with the following tables.

INSTALLATION

Carry out installation by reversing the order of removal, complying with the following.

- Adjust the drive position of combination switch. To this purpose, secure drive clip of combination switch on hub aligning clip indentation with seat obtained on the hub. Perform the following to ensure the correct automatic return of direction indicators.
- **Lubricate** the release ring in the coupling area with the combination switch using the grease prescribed:

MASCHERPA - Elettrolube 2G

- Tighten the nut securing the steering wheel to the prescribed torque.

(T) : **Tightening torque**
Nut securing steering wheel
28 to 32 N·m
(2.65 to 3.26 kg·m
19.16 to 23.57 ft·lb)

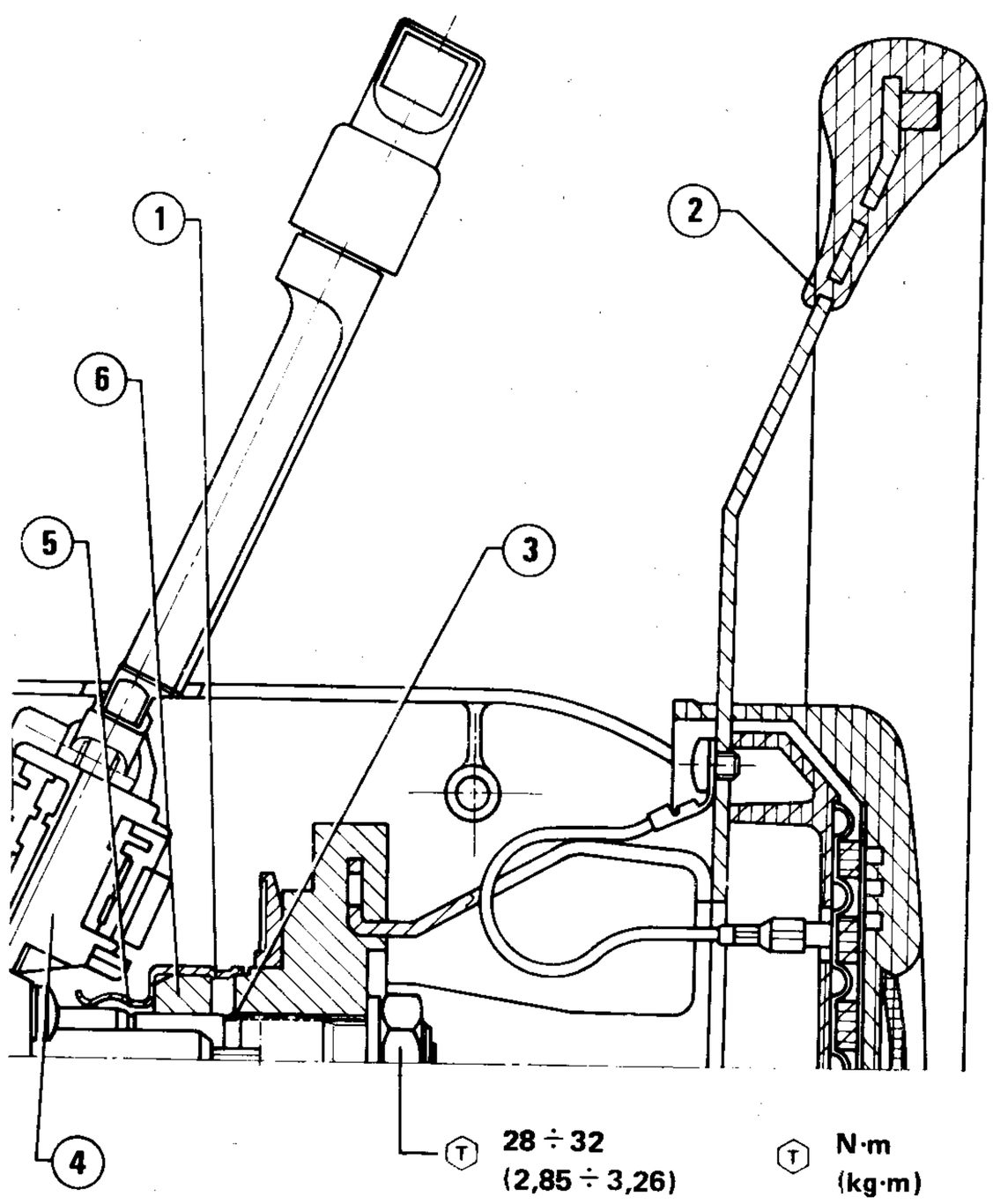

1 Drive clip indentation
2 Steering wheel
3 Hub seat
4 Combination switch
5 Drive clip
6 Steering wheel hub

Direction indicators control

	Control	Position	Service enabled
Left lever	Movement parallel to steering wheel plane	2 d	– right direction fixed indicator with automatic release
		1 d	– right direction indicator for lane changing with automatic release
		0	– zero position
		1 s	– left direction indicator for lane changing with automatic release
		2 s	– left direction fixed indicator with automatic release

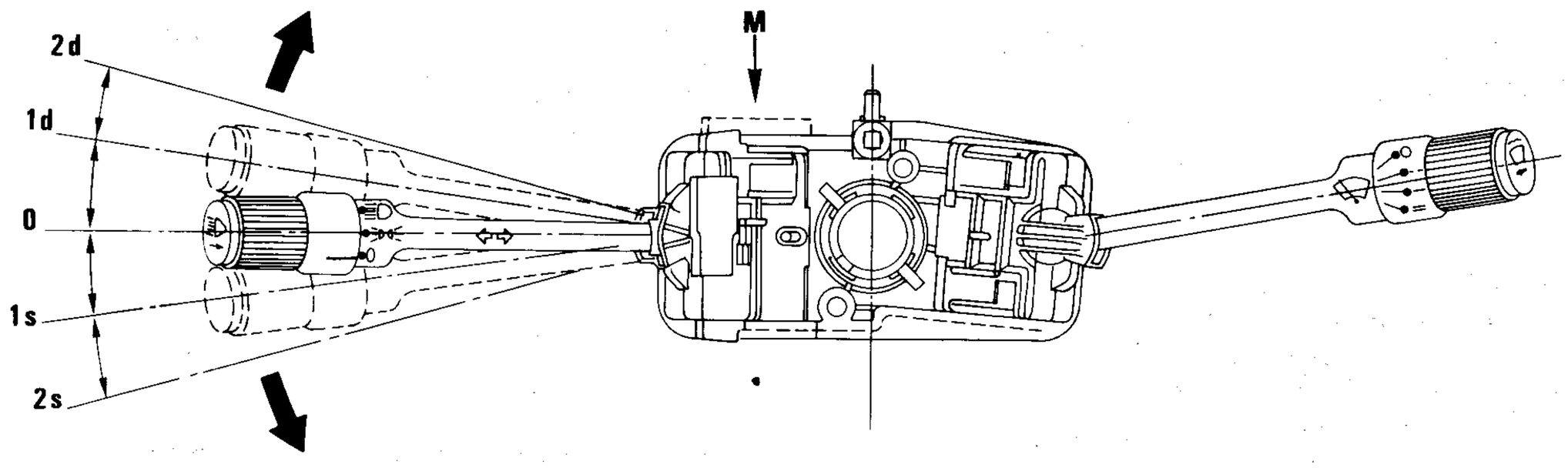

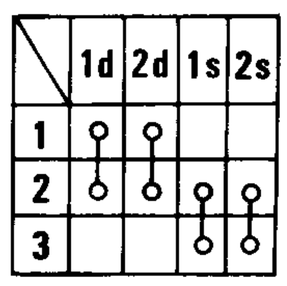

View from M

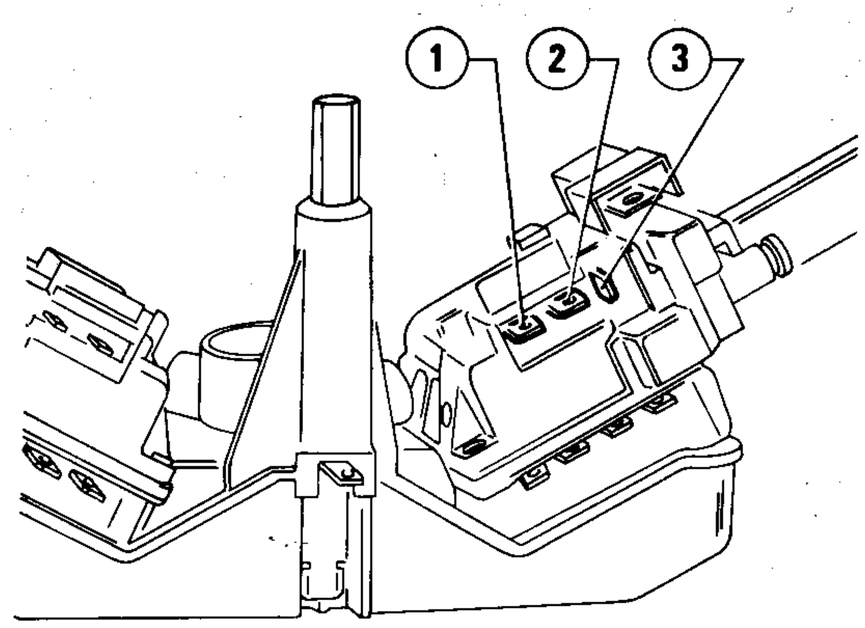

Windscreen wiper control

Control		Position	Service enabled
Right lever	Movement parallel to steering wheel plane	0	– zero position (OFF)
		1	– windscreen wiper intermittence (INT)
		2	– windscreen wiper 1st speed (1° V)
		3	– windscreen wiper 2nd speed (2° V)

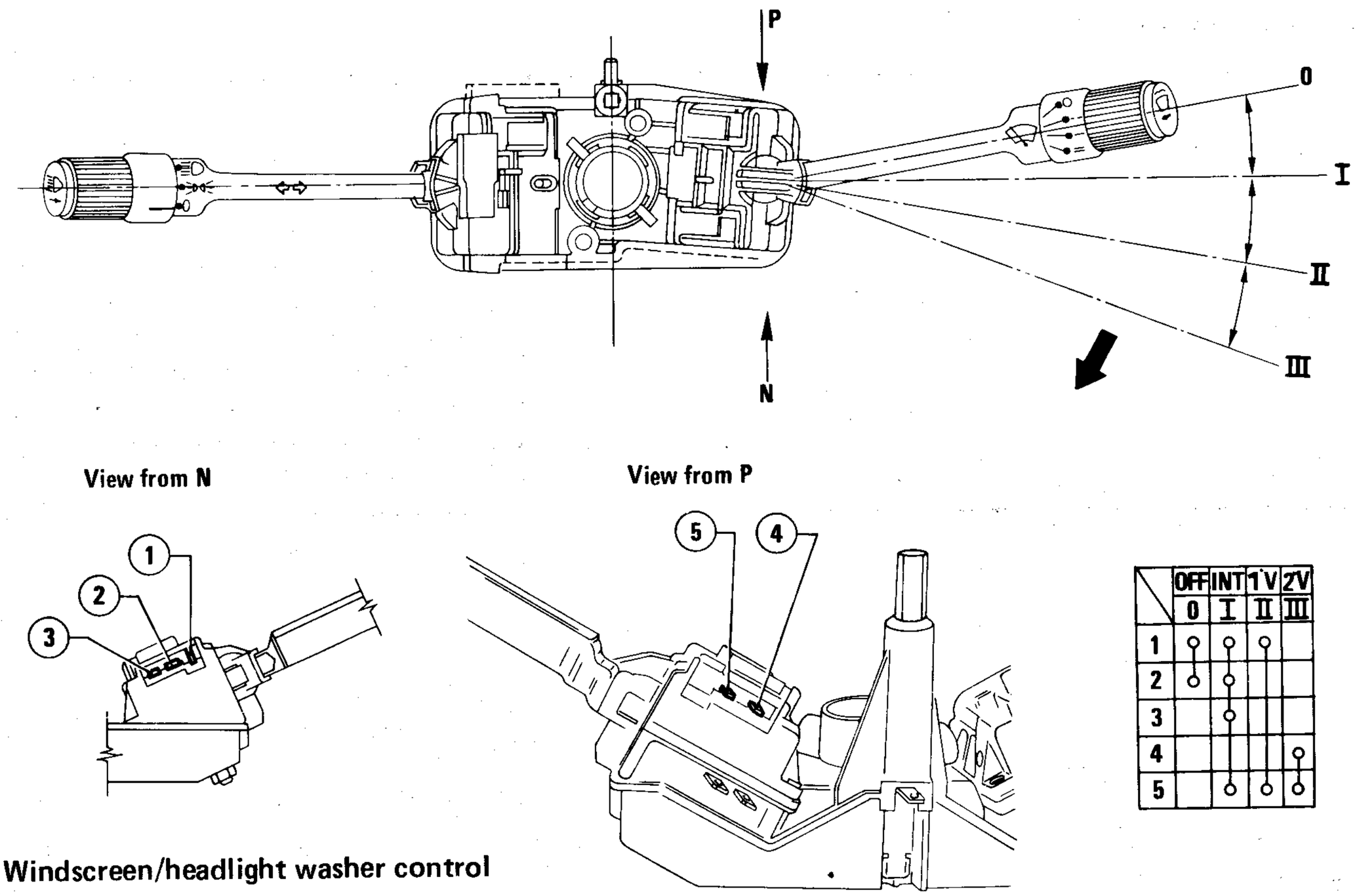

Windscreen/headlight washer control

Control		Position	Service enabled
Right lever	Movement parallel to steering wheel axis	OFF ON	– zero position – windshield washer with wiping stroke driven by control unit – windscreen washer with wiping stroke driven by control unit (paired to rotation of the left lever knob to positions 1 and 2)

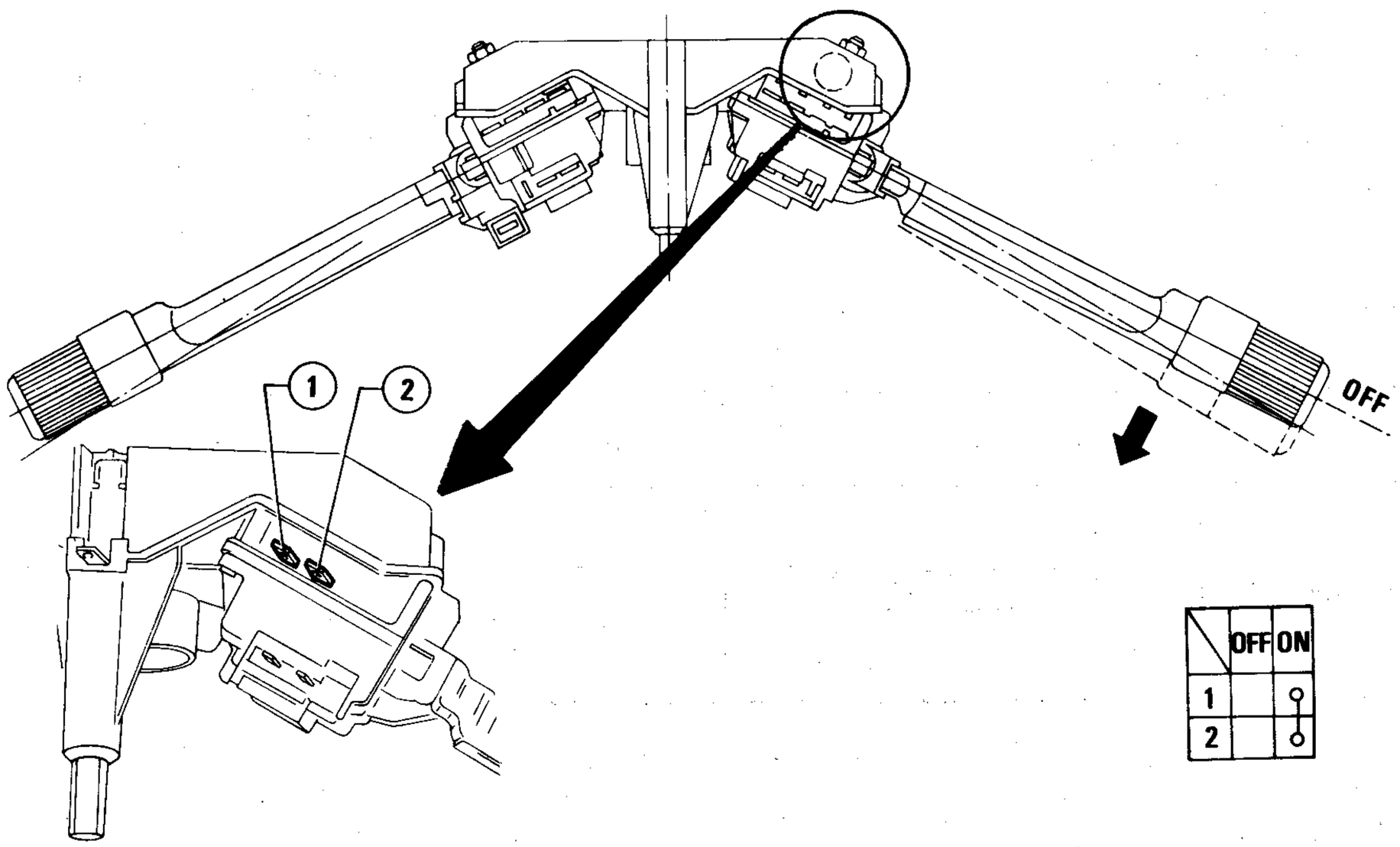

External lights control

Control		Position	Service enabled
Left lever	Knob rotation	0 1 2	– zero position – side lights – full beams fog light and rear fog light enabling
	Knob pressing in the arrow direction and knob releasing	B	– low beams (paired to rotation to position 2)
	Movement parallel to steering wheel axis	A C	– zero position – full beam flashing (paired to rotation to positions 0 and 1)

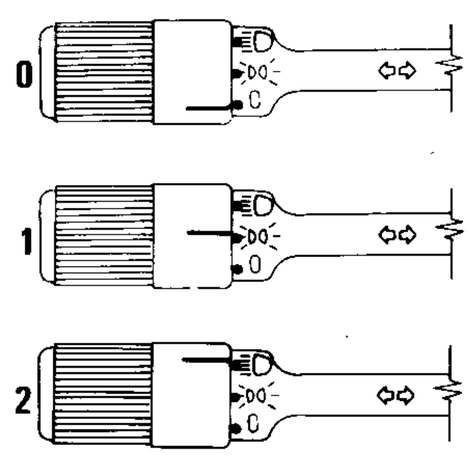

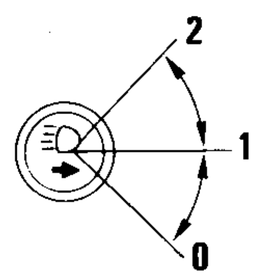

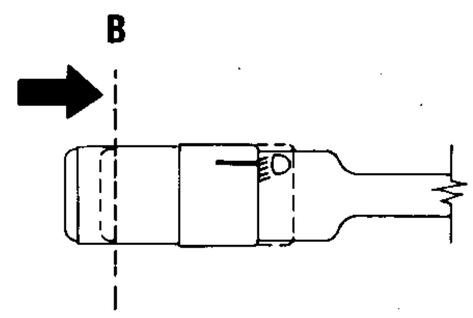

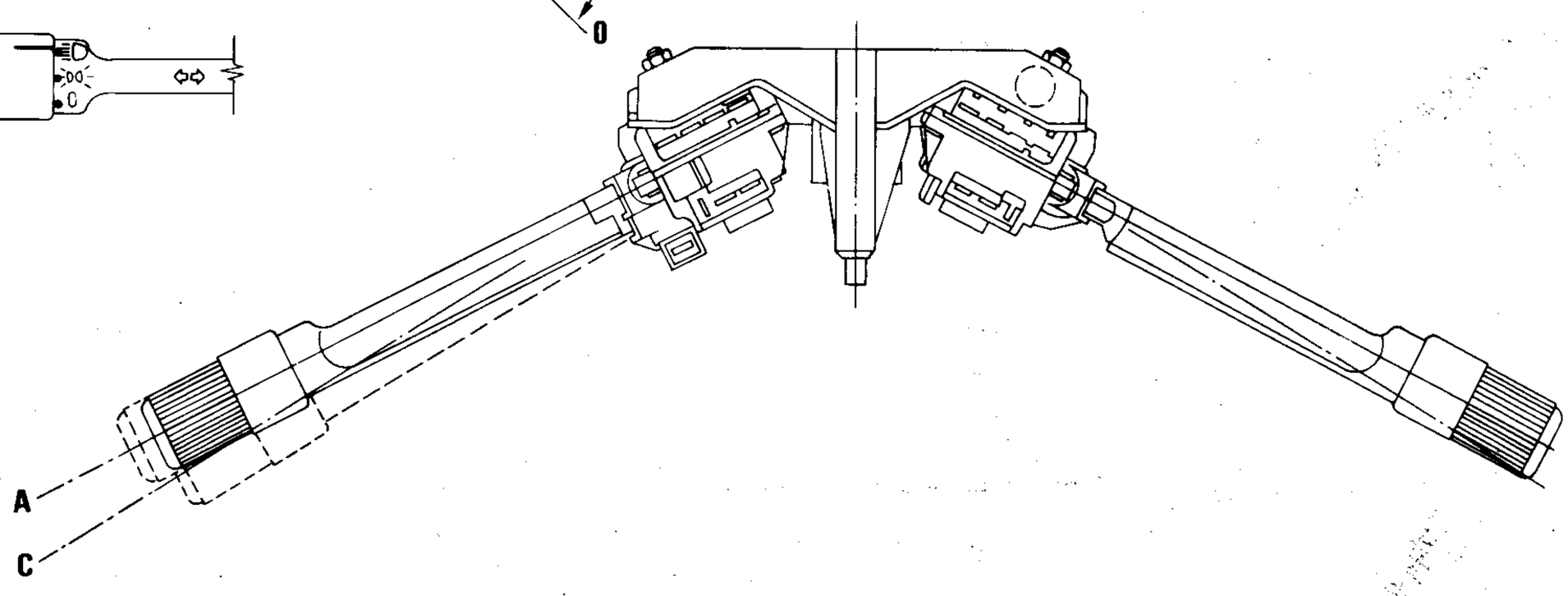

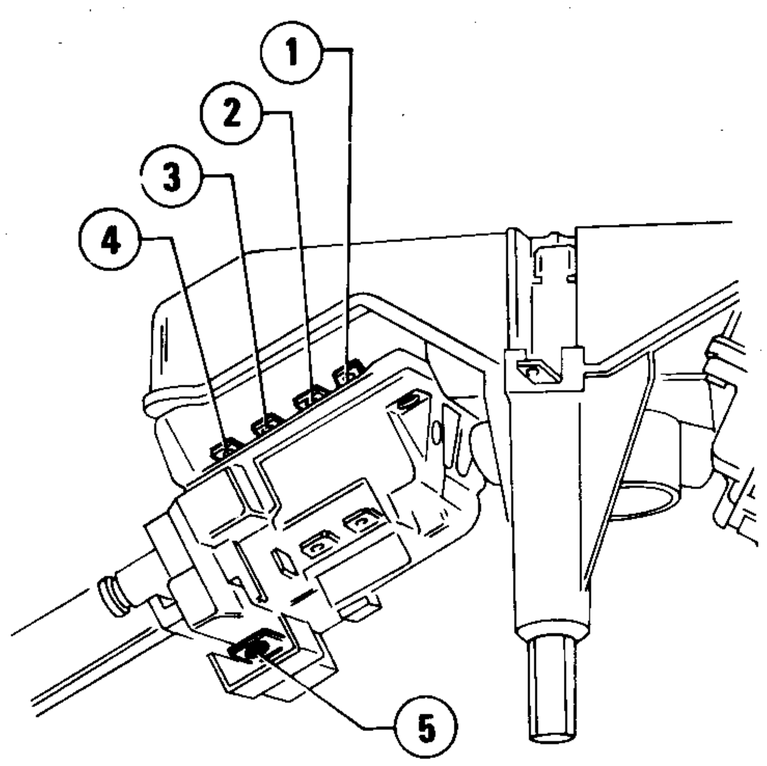

	0			1			2		
	A	B	C	A	B	C	A	B	C
1			○			○			○
2			○	○		○	○	○	○
3			○	○		○	○	○	○
4			○	○		○	○	○	○
5			○	○		○	○	○	○

EXTERNAL LIGHTING - FRONT SIDE *(wiring diagram)*

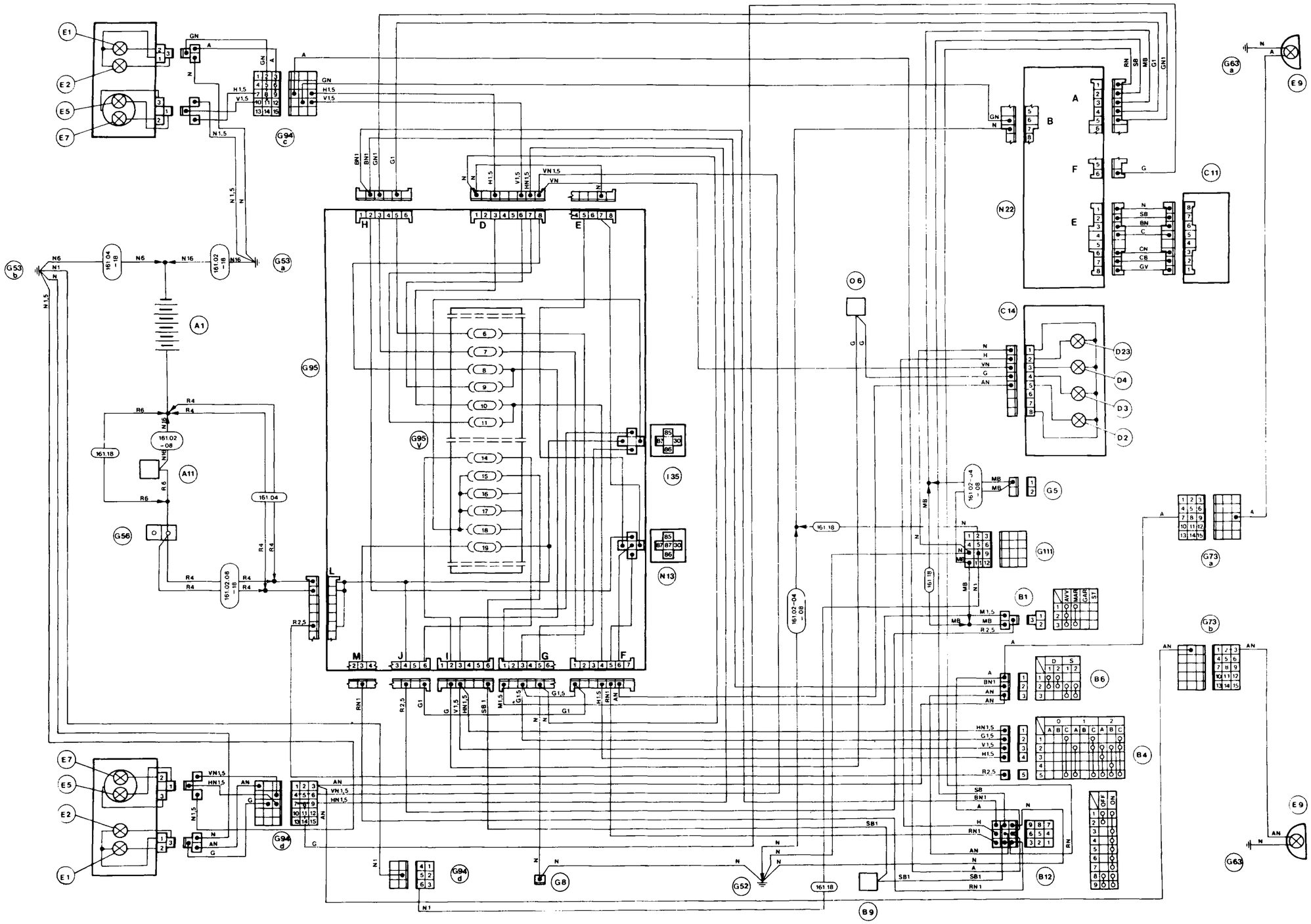

EXTERNAL LIGHTING - REAR SIDE *(wiring diagram)*

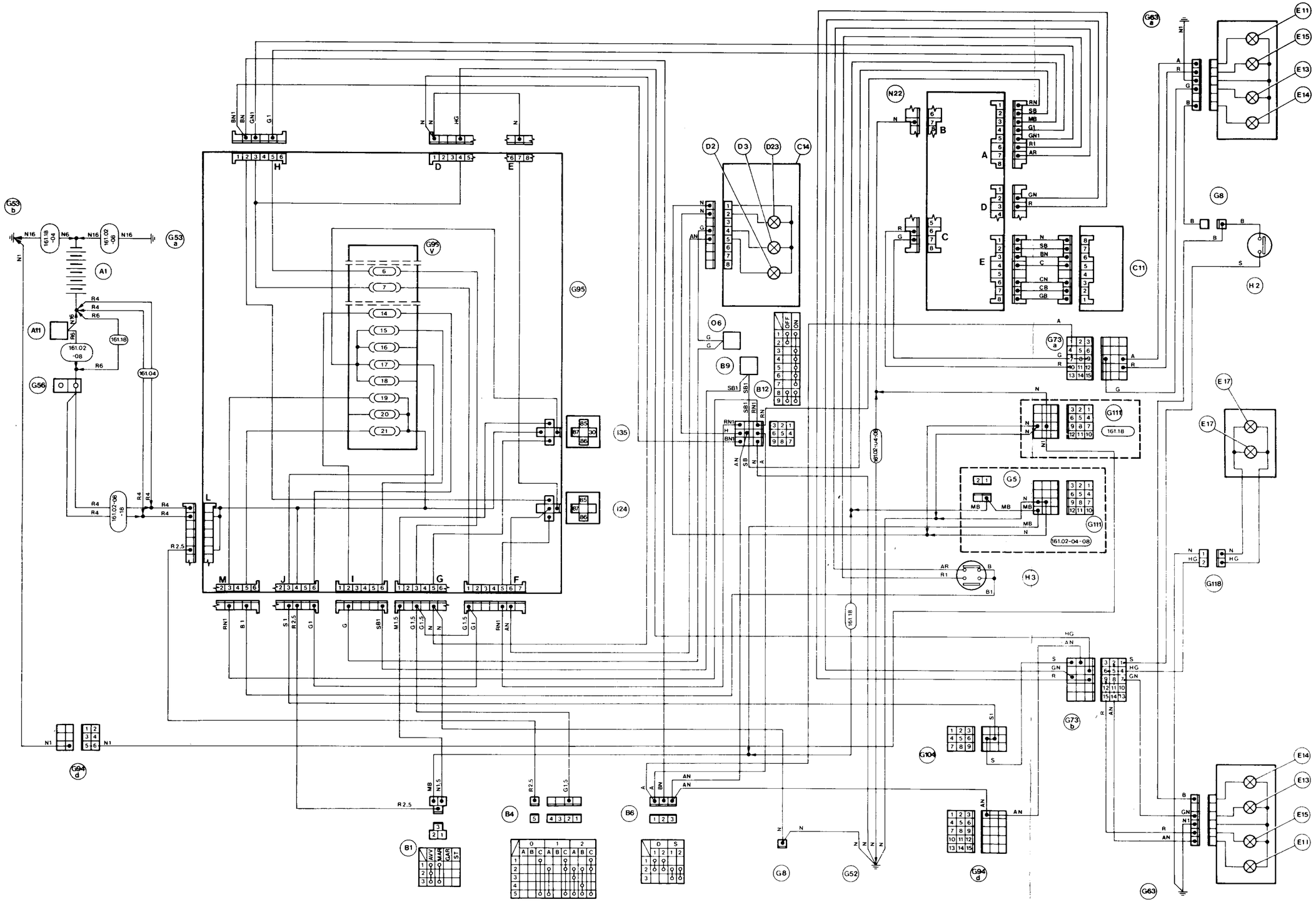

HEADLIGHT SWITCH

The sidelights/low beam/full beam switching, takes place through the knob of combination switch left lever (refer to: Combination Switch Unit).

DIRECTION LIGHT SWITCH

The direction indicators are operated through the left lever of combination switch (refer to: Combination Switch Unit).

HAZARD LIGHT SWITCH

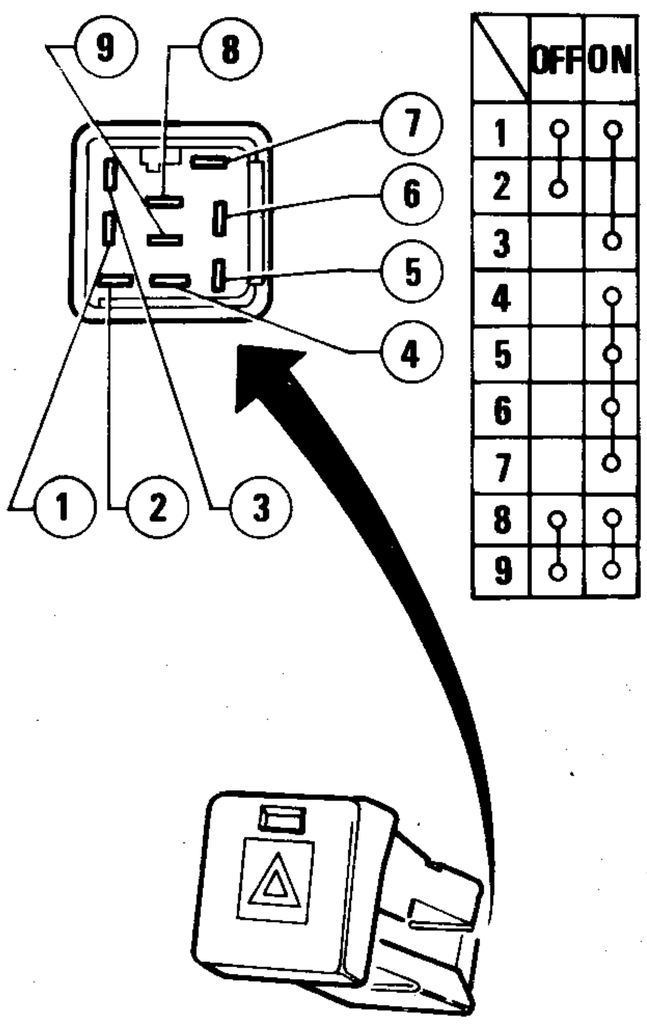

	OFF	ON
1	o	o
2	o	
3		o
4		o
5		o
6		o
7		o
8	o	o
9	o	o

Location

The hazard lights switch is located on cluster left-hand side (refer to: Group 66 - Dashboard).

Check

Check the switch correct functioning verifying that the continuity between terminals occurs as per the indications given in the table.

REPLACEMENT OF EXTERNAL LIGHTING WARNING LAMPS

To replace the warning lamps of side lights, full beam headlights, direction lights, hazard lights, refer to: Warning Lamps Panel.

REVERSE LIGHT SWITCH

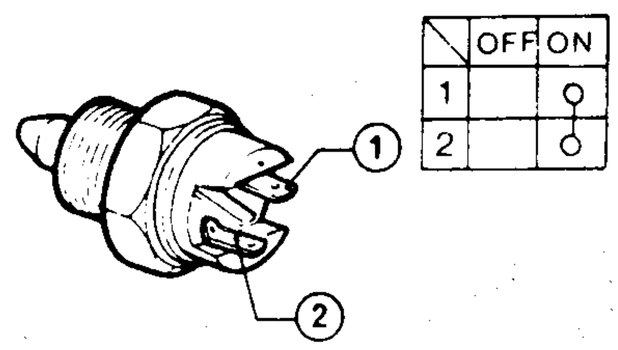

	OFF	ON
1		o
2		o

Location

It is mounted on the speed gear/ differential casing (refer to: WORKSHOP MANUAL - **mechanical units** - Group 17 - Overhaul at Bench of the Speed Gear/Differential Casing).

Check

Connect a tester to terminals of the reverse switch, and verify the following resistance values.

When in the OFF position = ∞
When in the ON position = 0Ω

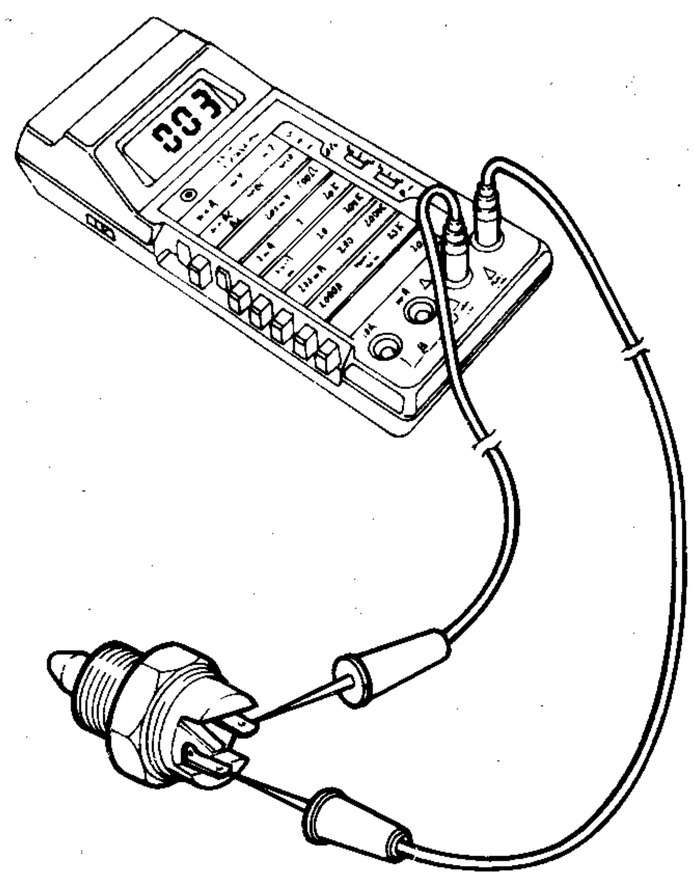

STOP LIGHT SWITCH

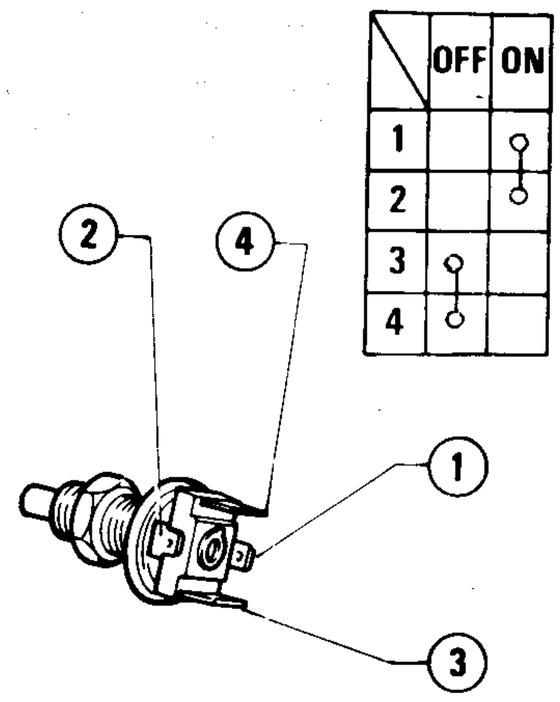

	OFF	ON
1		o
2		o
3	o	
4	o	

Location

The stop light switch is mounted on the special bracket on the steering column rear support.

Removal

1. Remove the door-lock control unit from its seat in the lower side of dashboard (underneath cluster) (refer to: Group 66 - Doorblock Control Unit).
2. Operating from the glove box opening, unscrew the plastic nut securing switch.

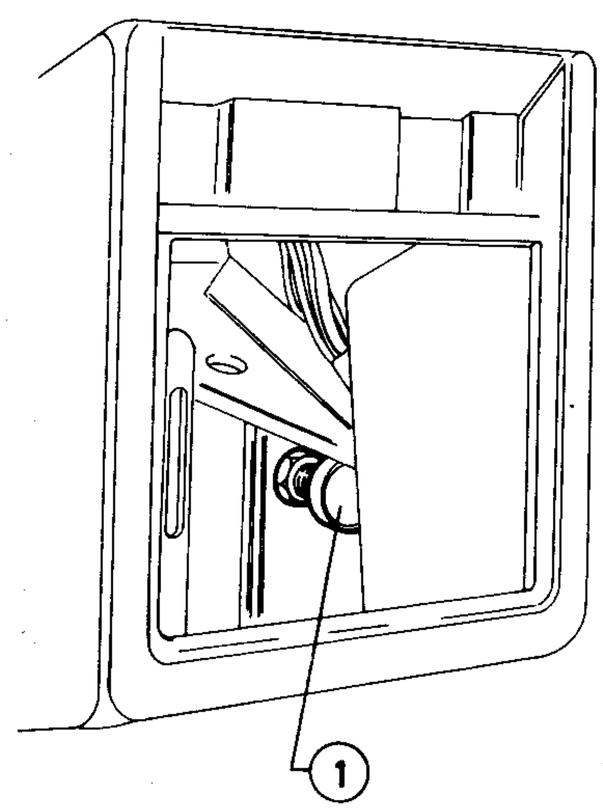

1 Stop light switch

3. Withdraw switch from bracket, and detach wiring.
4. Carry out installation by reversing the order of removal.

Check

Check the switch correct functioning, verifying that the electric continuity between terminals is as per the indications provided in the table.

HANDBRAKE WARNING LAMP SWITCH

	OFF	ON
1		○
2		○

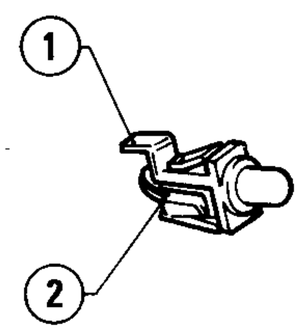

Location

It is mounted on the special bracket secured to the handbrake lever support (refer to: WORKSHOP MANUAL - **mechanical units** - Group 22 - Parking Brake).

Check

Connect a tester to the switch terminals and verify the following resistance values.

When in the OFF position = ∞
When in the ON position ≅ 0Ω

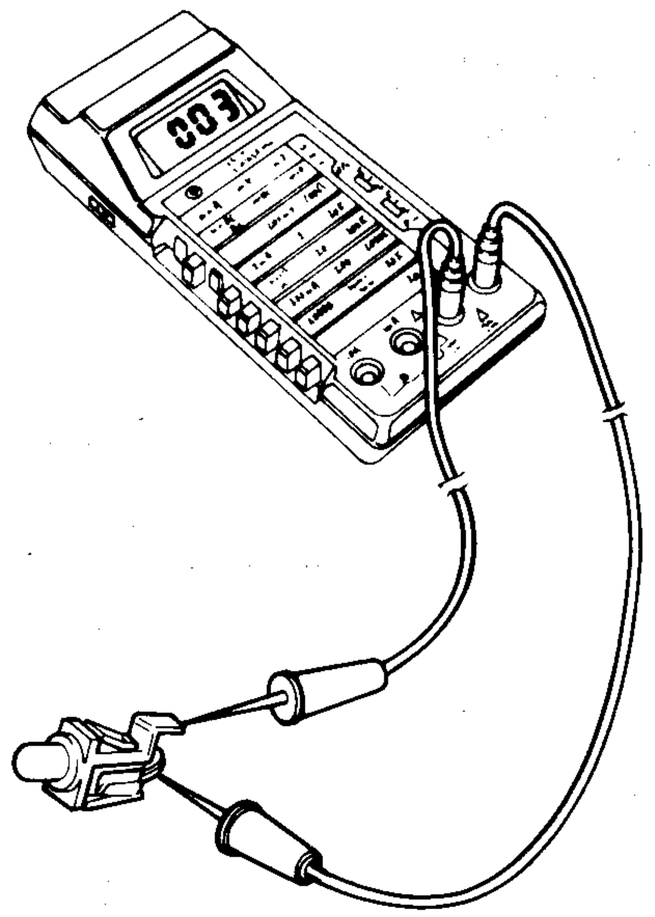

FRONT COMBINATION LAMPS

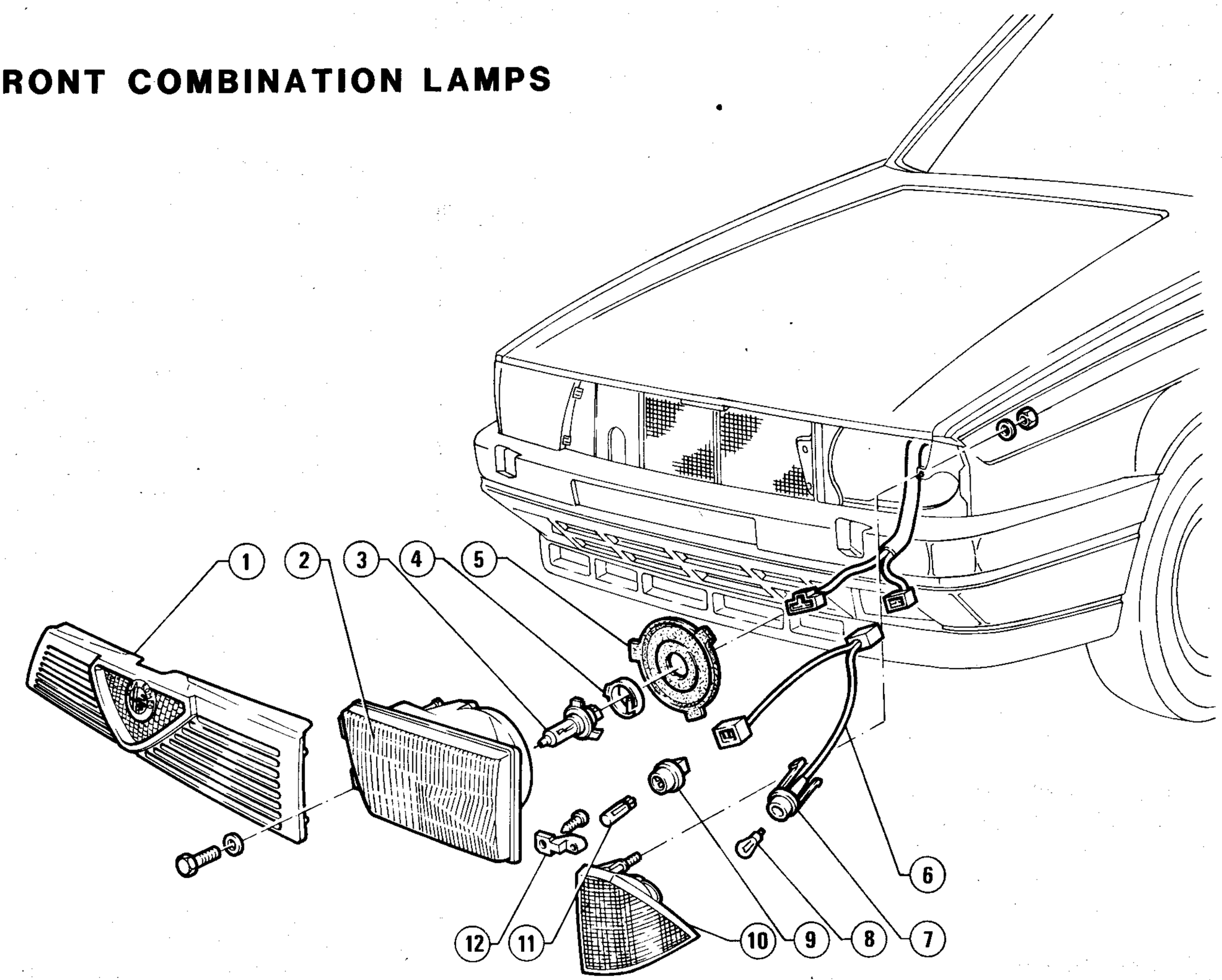

1 Radiator grille
2 Front combination lamp
3 Halogen lamp
4 Securing clip
5 Guard
6 Wiring
7 Direction indicator lamp holder
8 Direction indicator bulb
9 Side light lamp holder
10 Transparent cover
11 Side light bulb
12 Securing clip

REMOVAL AND INSTALLATION

1. Remove radiator grille (refer to: Group 75 - Radiator Grille).
2. Operating from the engine compartment inside, detach wiring (1) and (2).

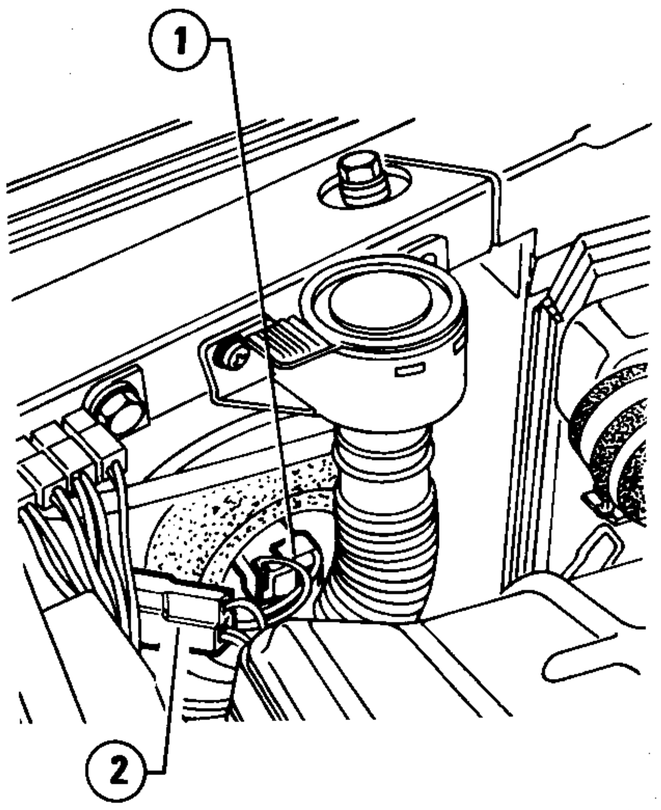

1 Low/full beam lamps wiring
2 Side/direction lamps wiring

3. Unscrew the three nuts securing combination lamp to body.

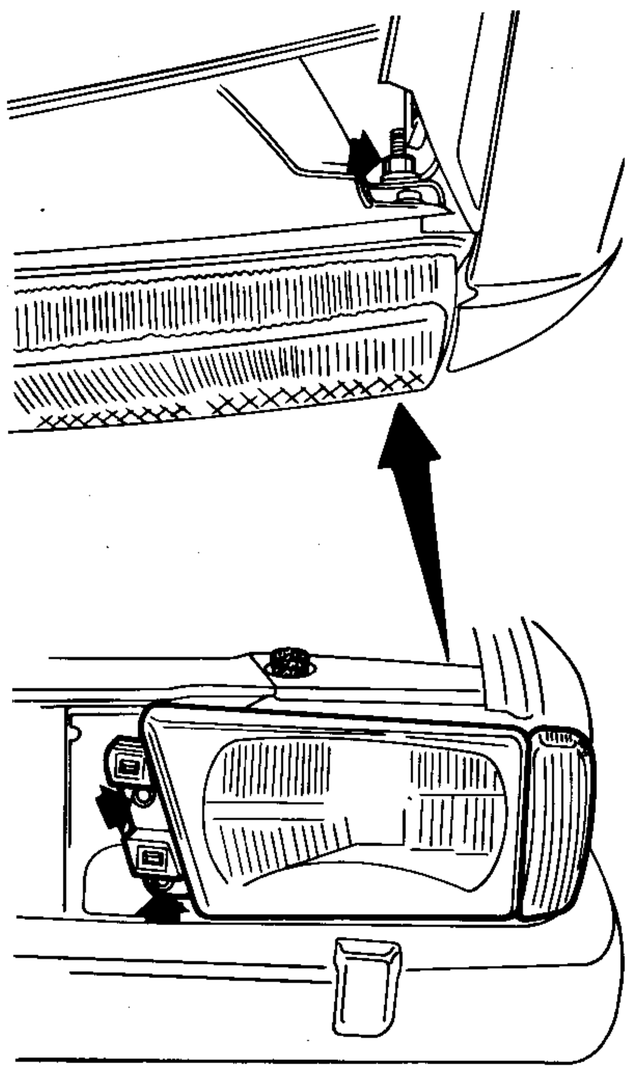

4. Remove the combination lamp.
5. If necessary, separate the direction indicator from headlamp unit.
a. Rotate lampholder (2) counterclockwise, and remove it.
b. Unscrew the two screws securing transparent cover (1) to combination lamp (3). Remove transparent cover and recover the two clip.

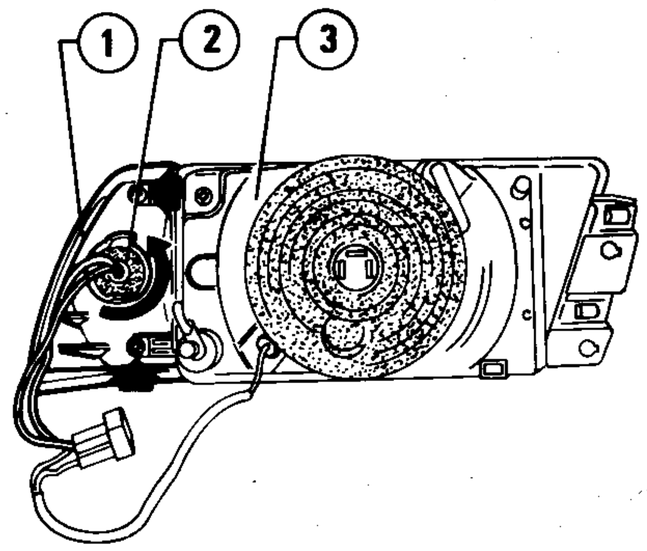

1 Transparent cover
2 Direction indicator lampholder
3 Front combination lamp

6. Install the direction indicator and the combination lamp, by reversing the order of removal.
7. Adjust the luminous beam by following the procedures described in "Setting of Headlight Low Beams".

LAMP REPLACEMENT

Headlights and front sidelights

1. Operating from the engine compartment inside, disconnect wiring (2) and remove rubber protection (1).

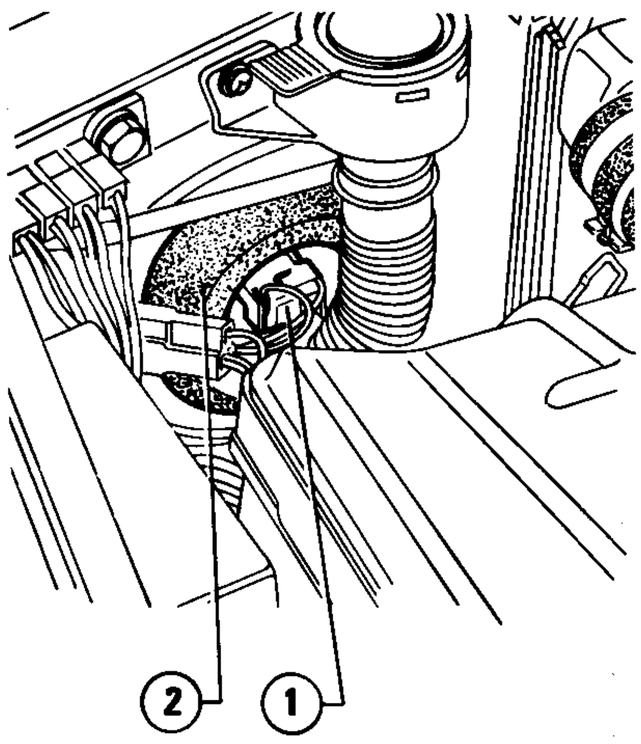

1 Rubber protection
2 Wiring

2. Press and rotate fastener (2) counterclockwise and remove it.
3. Withdraw the halogen lamp (1) and replace it. When installing it, position the lamp correctly, mating the notches present on the cup with the corresponding ones of the combination lamp.

CAUTION:
Never touch the headlight halogen lamp (1) glass with bare hands, if so, wash the lamp with alcohol.

4. To replace the sidelight lamp (4), remove lampholder (3) and withdraw the lamp by pulling the bulb.

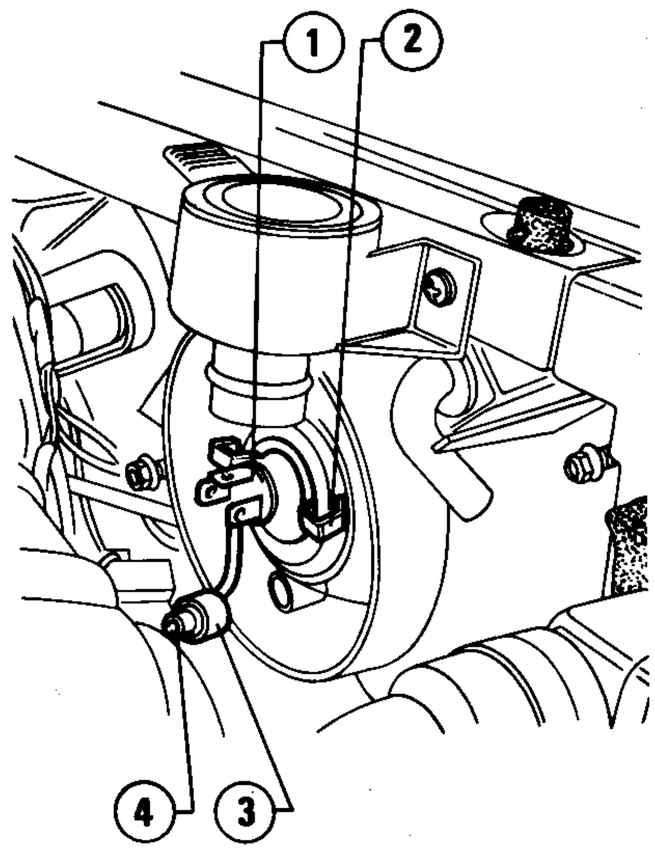

1 Halogen lamp
2 Fastener
3 Lampholder
4 Sidelight lamp

5. Reassemble by reversing the order of removal.

Direction lights

1. Operating from the passenger compartment inside, press and rotate lampholder (2) counterclockwise, and remove it.
2. Press lamp (1) bulb, and rotate it to remove the lamp.
3. Replace the lamp and install lampholder (2).

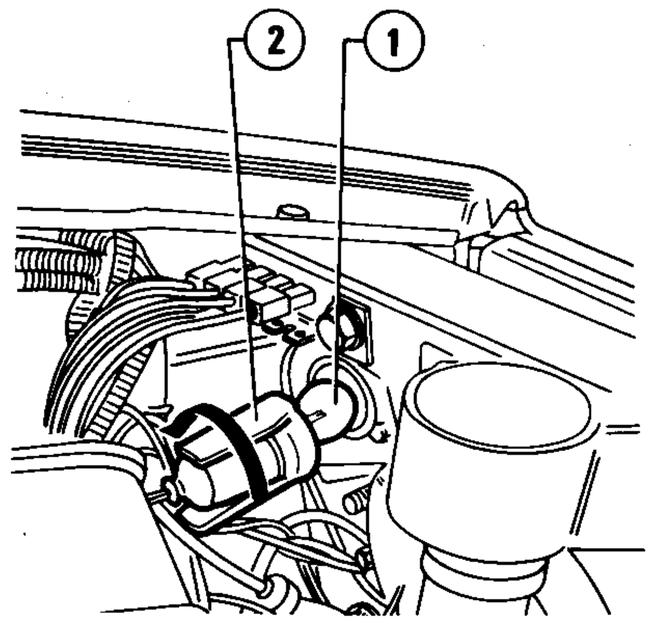

1 Lamp 2 Lampholder

SETTING OF HEADLIGHTS LOW BEAM

Setting headlights in relation to load

To carry out this setting, rotate lever (1) until it is in the correct position shown in the table.

Position	Load conditions
A	Vehicle unladen
B	Average load.
C	Full load

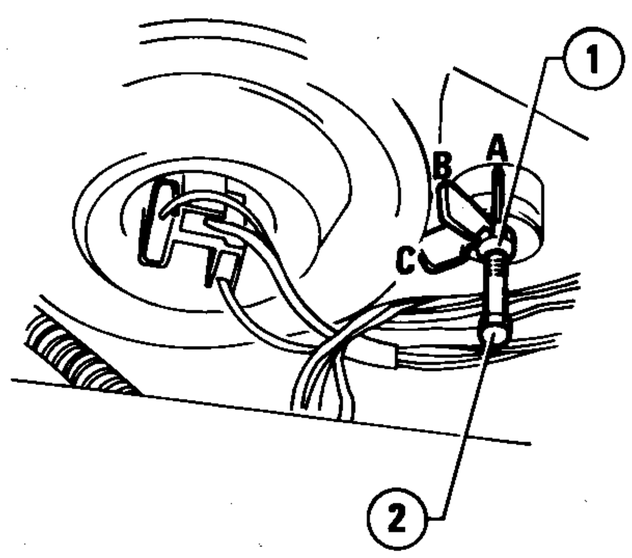

1 Low beam position adjusting lever
2 Vertical direction adjusting screw

Luminous beam setting

Follow the below procedure to adjust the headlights low beam.
1. Check that tyres are inflated at the right pressure and that car is unladen and without fuel.
2. Verify that the lever for low beam position adjustment is in the "A" position (refer to: Setting Headlights in Relation to Load).
3. Position the vehicle and the possible test equipment on a horizontal plane. If no test equipment is available, place the car in front of a clear screen.
4. Move vehicle backwards of about **10 m (32.8 ft)** and switch on the low beams. The luminous beam must be in compliance with the geometric dimensions provided in figure.

A = **distance of headlight centre from ground**
B = **height of luminous beam**
C = **10 m (32.8 ft)**

Orientation is correct when the following condition is obtained: **1.6** **1.8** **2.0** and **2.0** turbodiesel

B = 480 mm (18.9 in)

Data non available for
✱ 6V iniezione

The distance D between centre of luminous beams, must be equal to the distance E between headlight centre.
The dimensions indicated in the diagram, comply with the provisions in force in Italy. For other Countries, comply with the national provisions.

To correct the possible setting errors, operate, from the engine compartment inside, on the adjusting screws related to the headlights shown in the figure below.

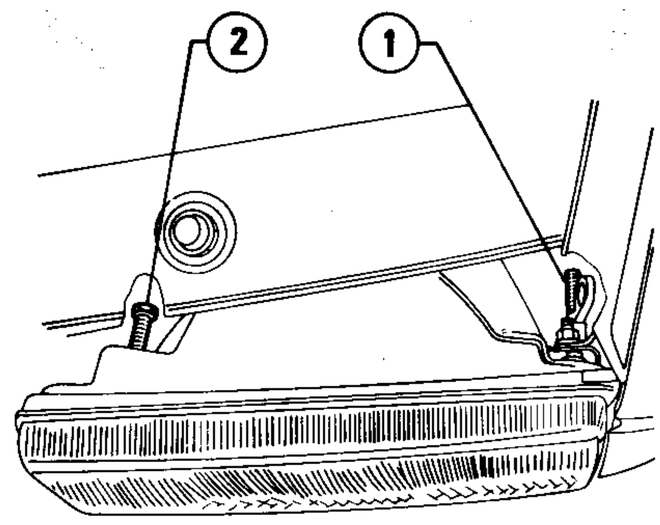

1 Horizontal direction adjusting screw
2 Vertical direction adjusting screw

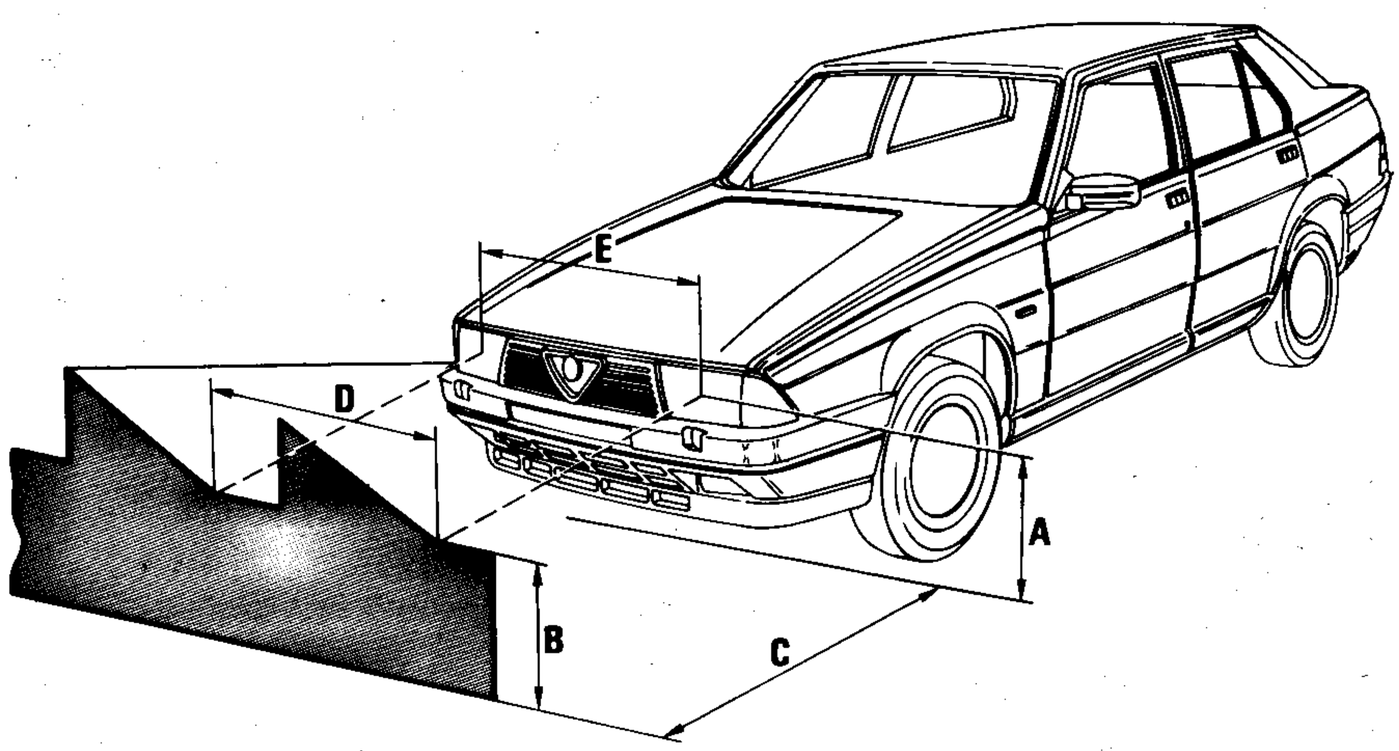

SIDE REPEATERS

1. Press on one side, and remove indicator (1) from bumper.
2. Withdraw lampholder (3) from direction indicator (1).
3. Replace lamp (2) by pulling the relevant bulb.
4. Install direction indicator by reversing order of removal.

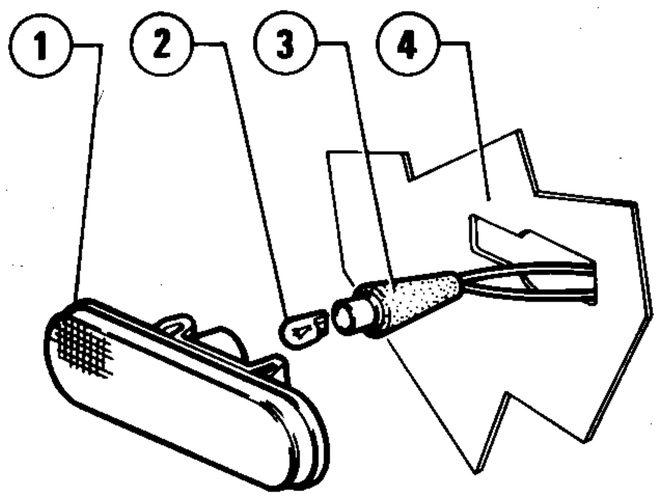

1 Direction indicator
2 Lamp
3 Lampholder
4 Fender

REAR COMBINATION LAMPS

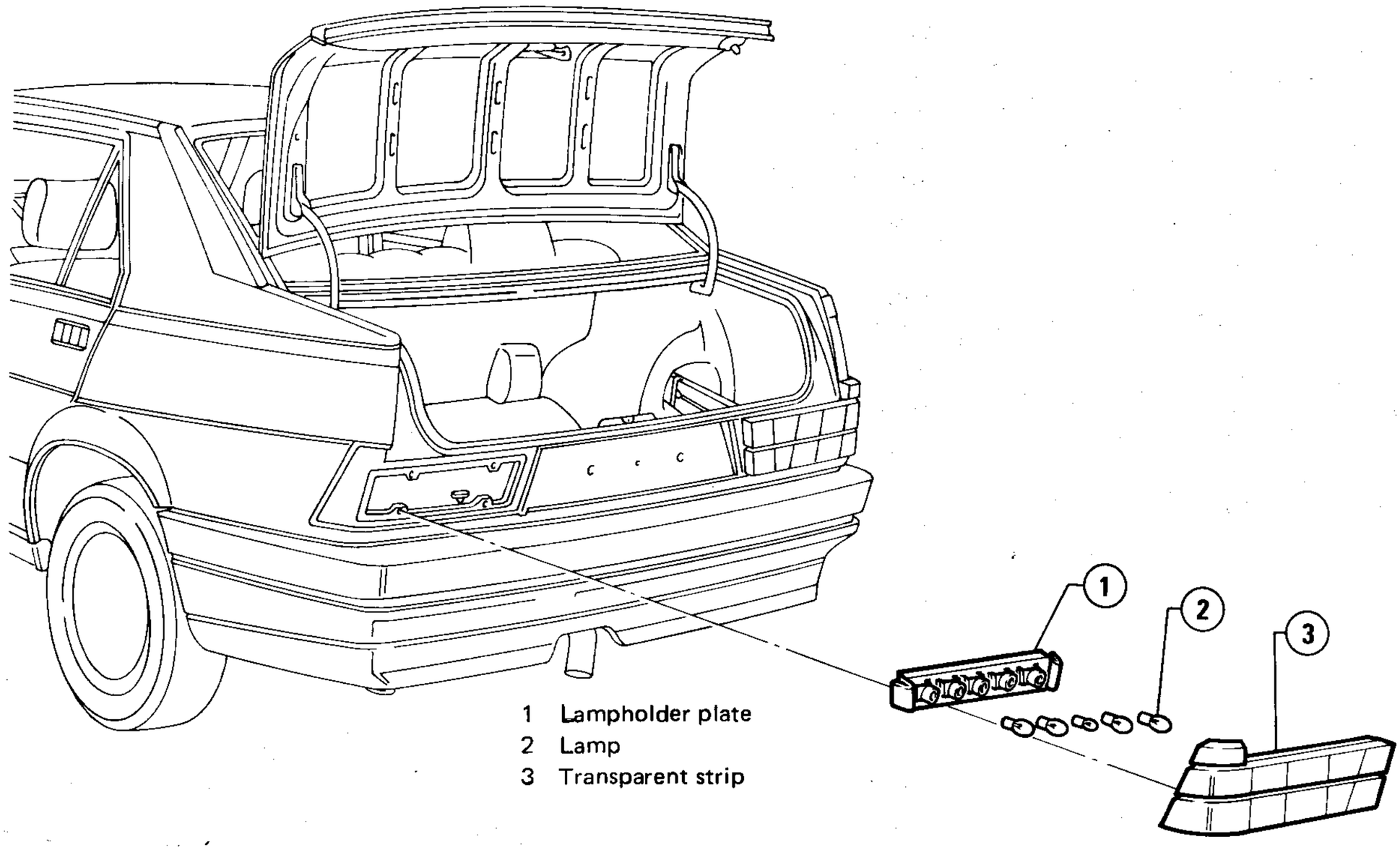

1 Lampholder plate
2 Lamp
3 Transparent strip

REMOVAL AND INSTALLATION

1. Operating from the luggage compartment inside, remove the rear trimming (refer to: Group 66 - Rear Trim).
2. Detach wiring (2) by pulling lever (3) forward.
3. Unscrew the five nuts securing combination lamp (1) to body, and remove.

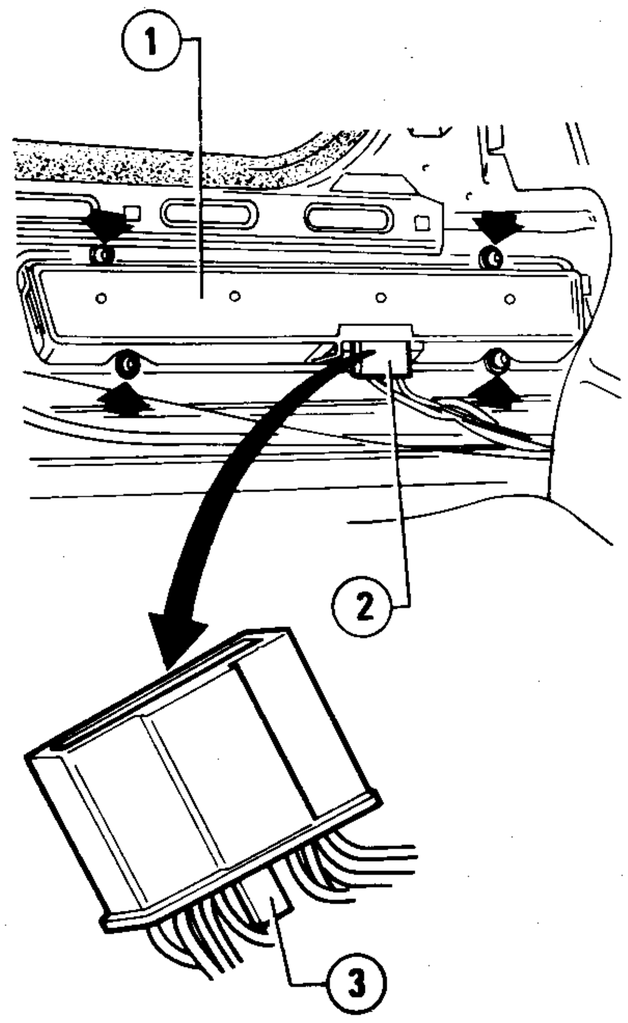

1 Combination lamp
2 Wiring
3 Lever

4. Install the combination lamp by reversing the order of removal.

LAMP REPLACEMENT

1. Open the boot.
2. Operating from the luggage compartment inside, slowly press the lampholder plate, pull, and remove it.

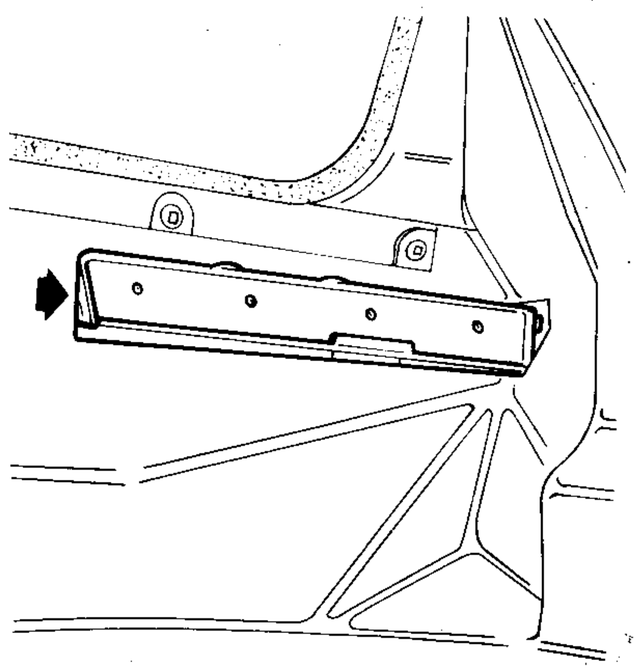

3. Press the bulb of the lamp to be replaced, rotate lamp and remove it.

4. Replace the lamp and install the lampholder plate.

For the identification of lamps location, refer to the diagram below. The diagram refers to the left combination lamp; the right - hand one, is specular with respect with the left one.

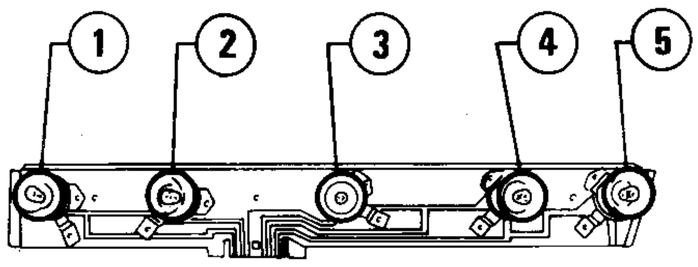

1 Direction indicators
2 Stop light
3 Side light
4 Rear fog light
5 Reverse light

REAR REFRACTIVE STRIP AND NUMBER PLATE LIGHTS

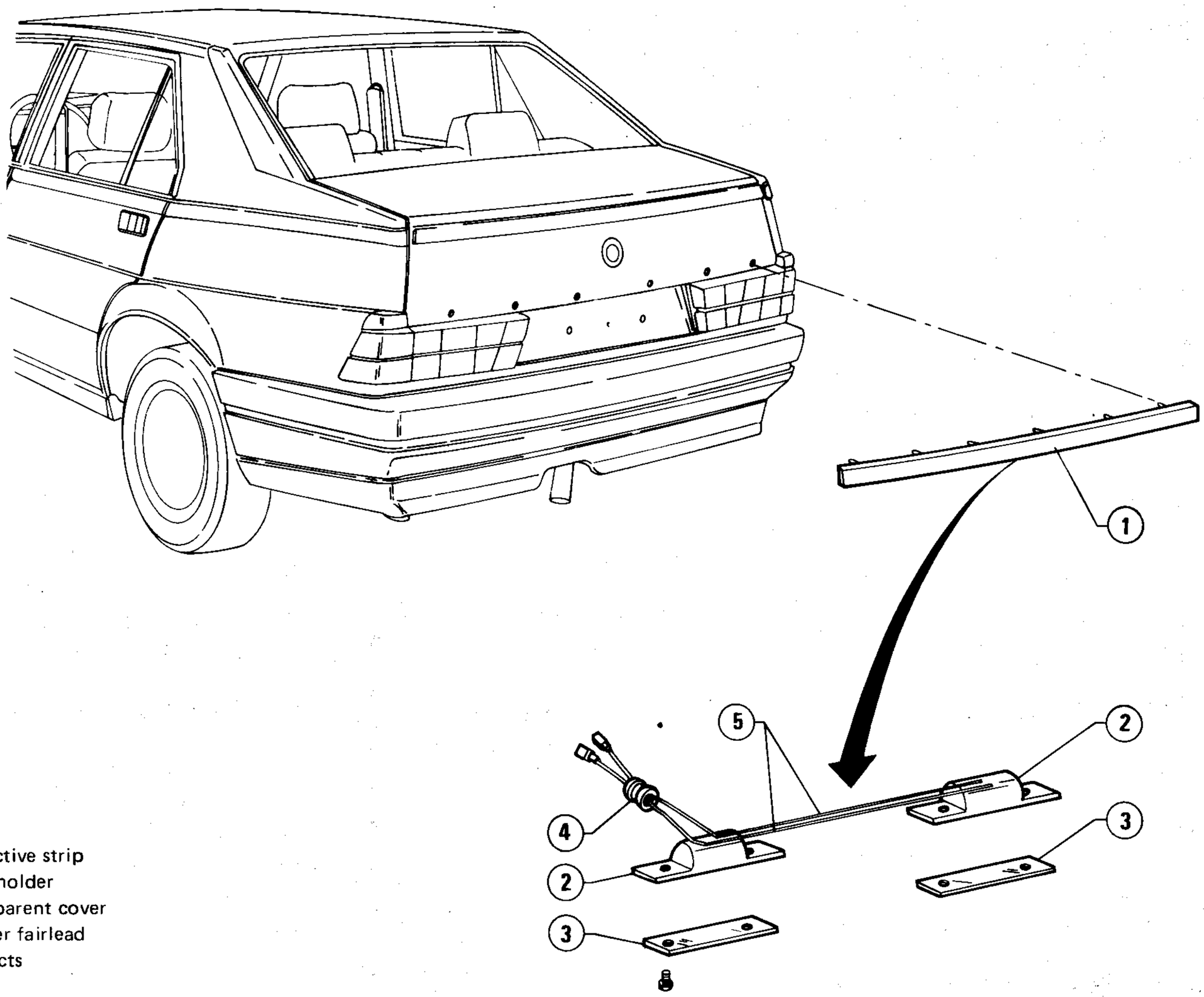

1 Refractive strip
2 Lampholder
3 Transparent cover
4 Rubber fairlead
5 Contacts

REMOVAL AND INSTALLATION OF REAR REFRACTIVE STRIP

1. Open the boot lid, disconnect wiring (2), and unscrew the six nuts securing strip (1) to boot lid. Remove the strip.

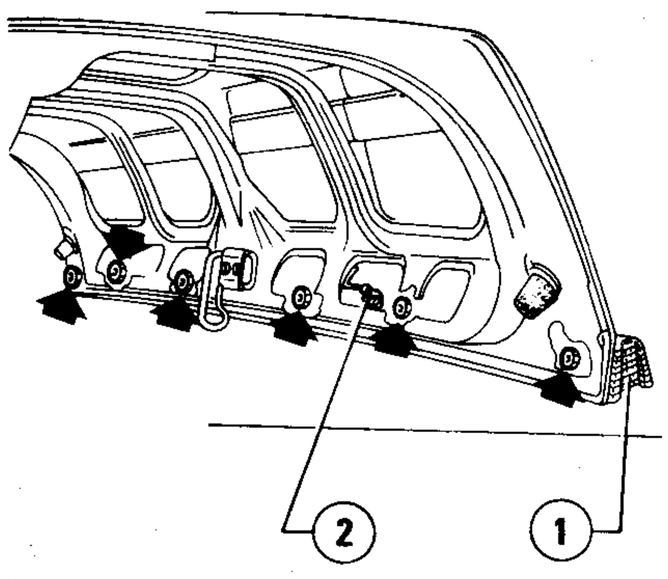

1 Refractive strip
2 Wiring

2. Install the refractive strip by reversing the order of removal.

REPLACEMENT OF NUMBER PLATE LIGHTS

1. Unscrew the two screws securing each transparent cover (2) and remove these last.

2. Withdraw the bulb and replace it.

3. If required, to remove the lampholders first disconnect the wiring, then operate with a screwdriver on clip (3), and withdraw lampholders (1).

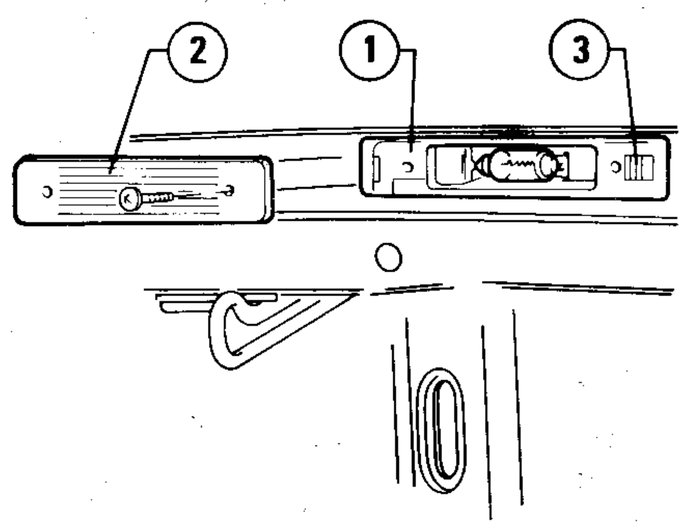

1 Lampholder
2 Transparent cover
3 Clip

4. Install lampholder by reversing the order of removal.

FOGLIGHTS AND REAR FOGLIGHTS *(Except Switzerland)*

(wiring diagram)

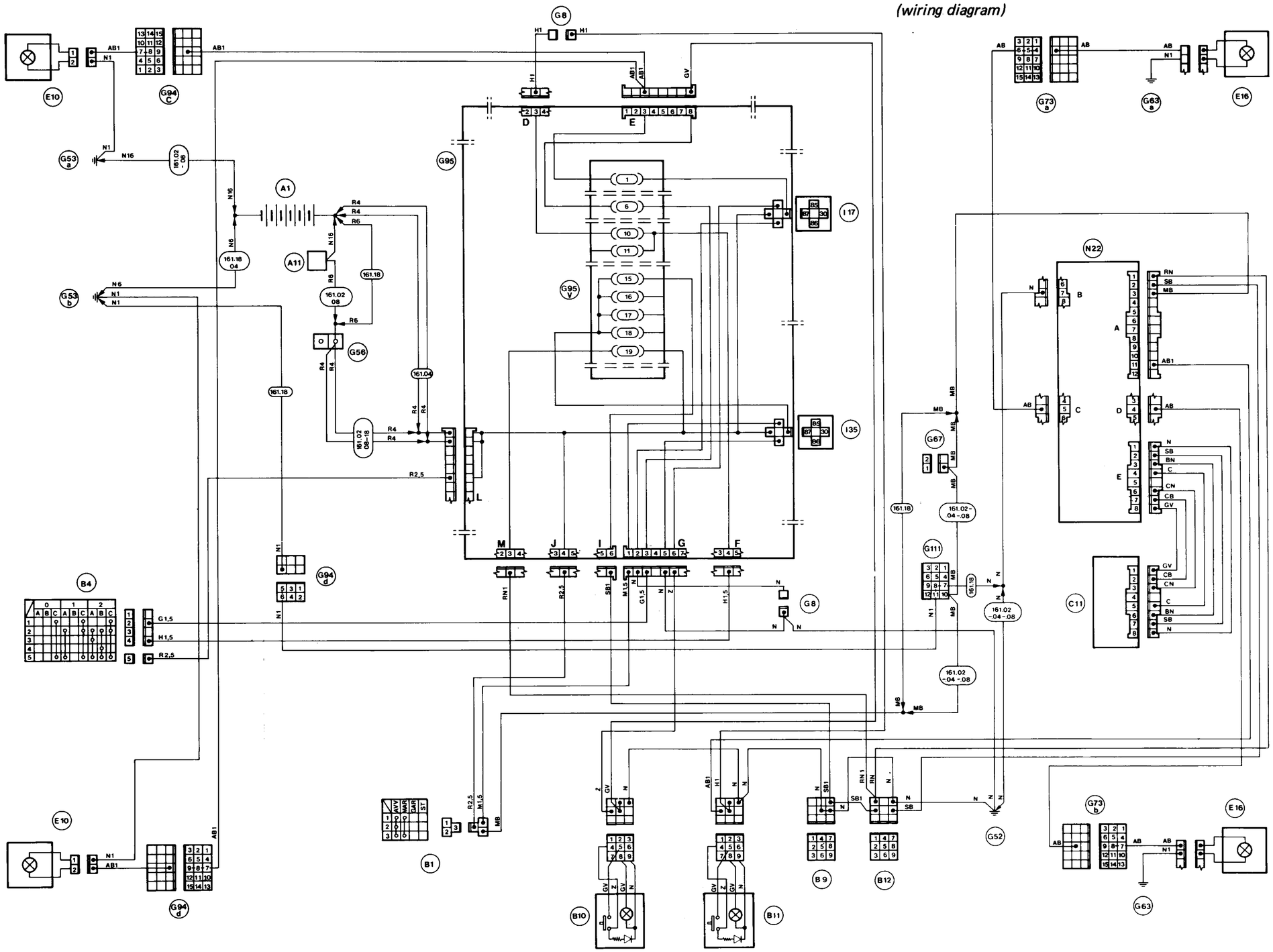

FOGLIGHTS AND REAR FOGLIGHTS *(For Switzerland)*

(wiring diagram)

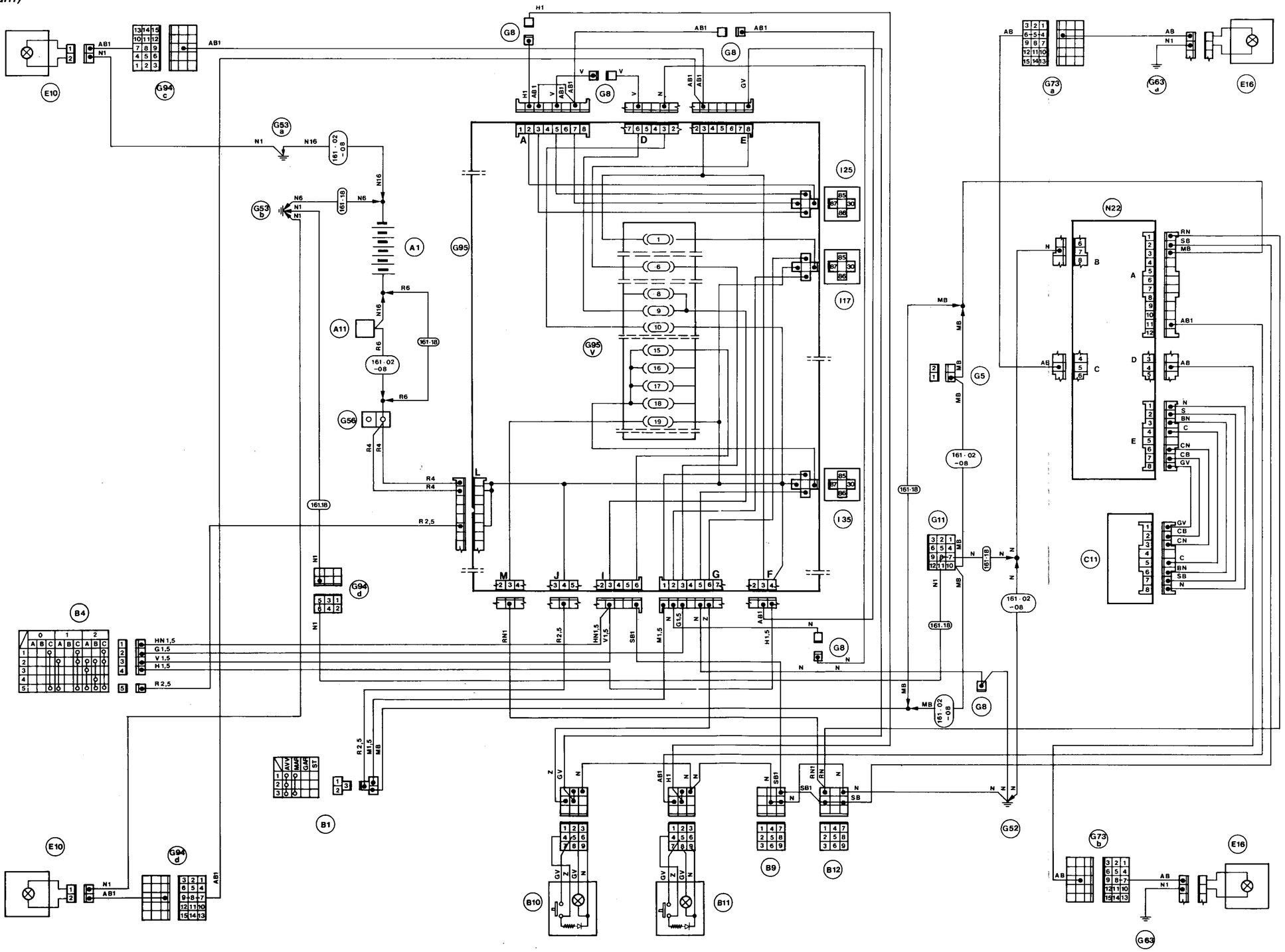

FOGLIGHTS

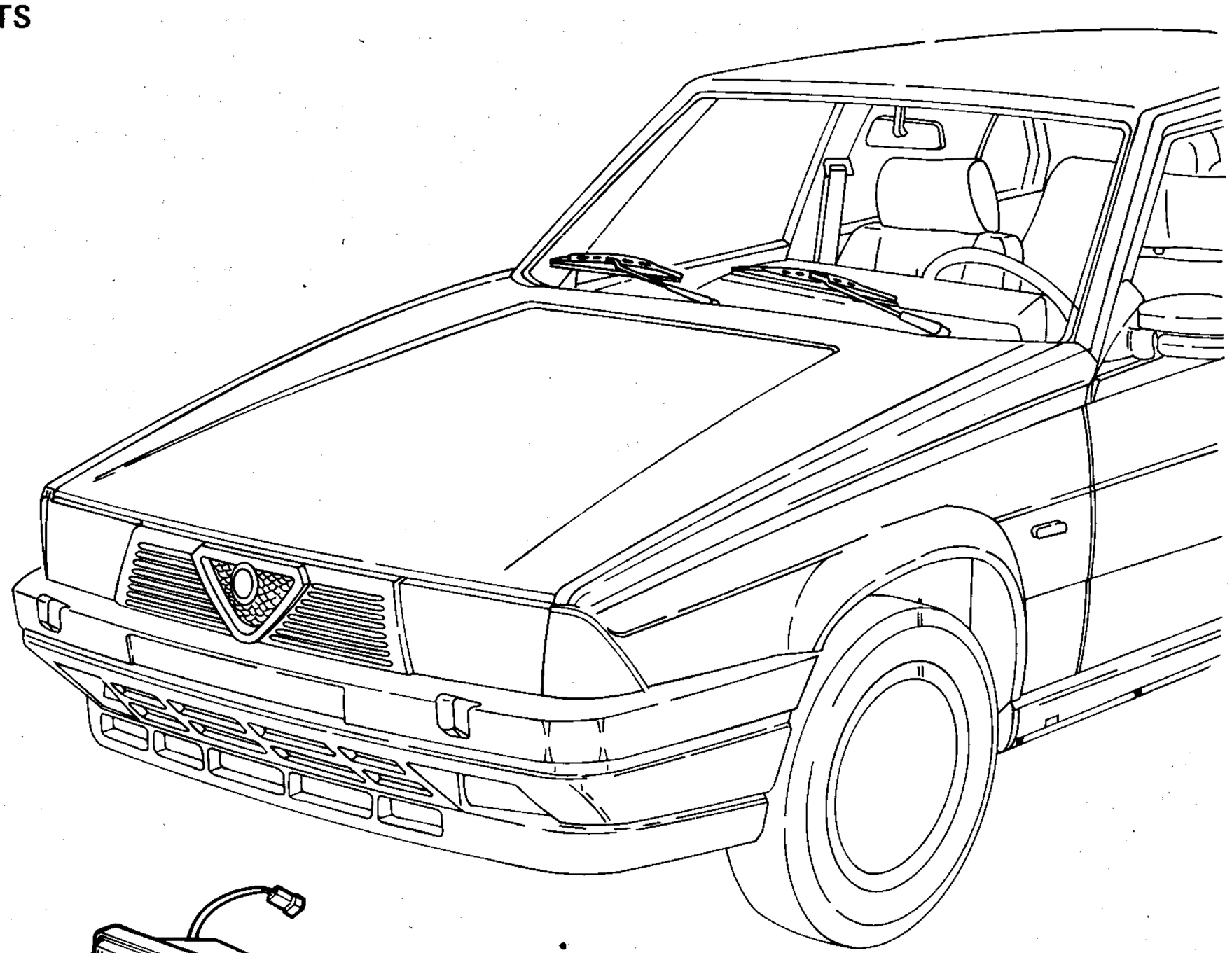

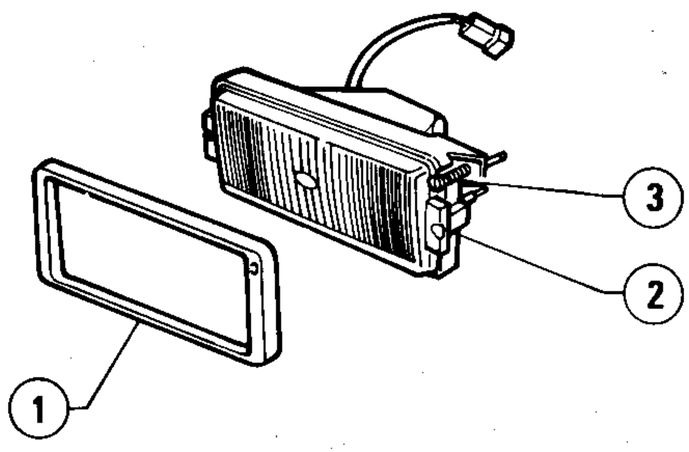

1 Rim
2 Foglight
3 Luminous beam adjusting screw

Removal and installation

With reference to the exploded view, operate as follows.

1. Remove rim (1), pressure-inserted in the foglight compartment of front bumper.

2. Disconnect wiring and remove the foglight, fixed with three pins, from front bumper.

3. Install the foglight by reversing the order of removal.
Since clips (1) (refer to the following figure) could be damaged when removing, it is good practice to replace them when installing.

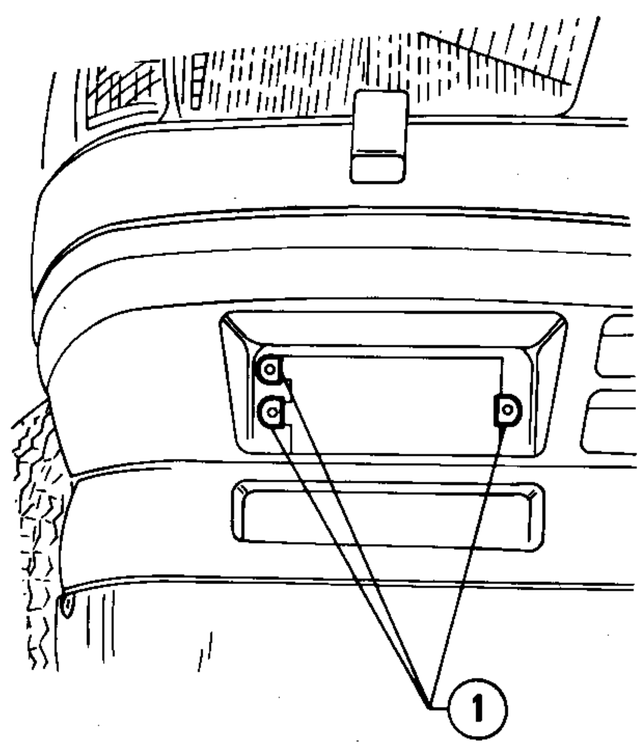

1 Clips

4. If necessary, adjust the luminous beam in the vertical direction, by operating on screw (3) (refer to the exploded view).

Lamps replacement

1. Remove the headlight rim (refer to: Removal and Installation).

2. Unscrew the screws and remove the two plates (2), separating foglight (1) from rear protection.

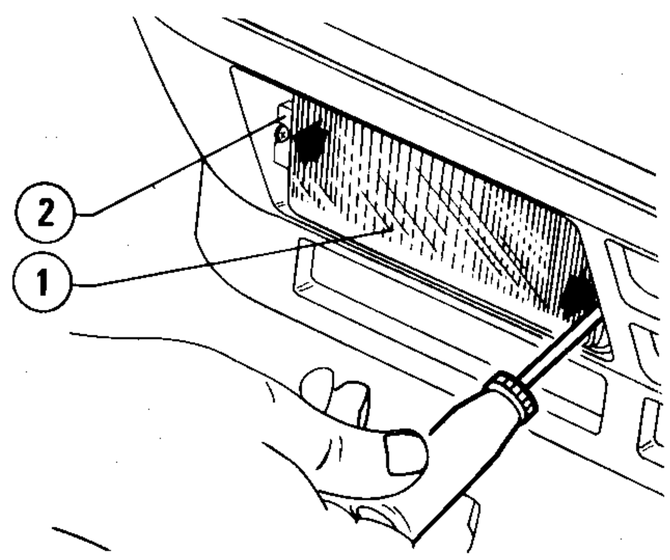

1 Foglight
2 Plates

3. Release clip (1), and carefully remove lampholder and bulb.

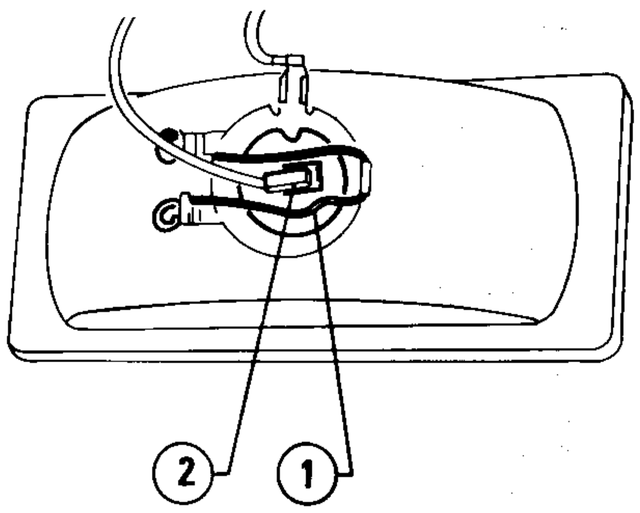

1 Clip securing lampholder
2 Lampholder

CAUTION:
Never touch the halogen lamp bulb with bare hands; if so, wash it with alcohol.

4. Install lampholder directing it correctly, and secure the related clip.

FOG LIGHT SWITCH

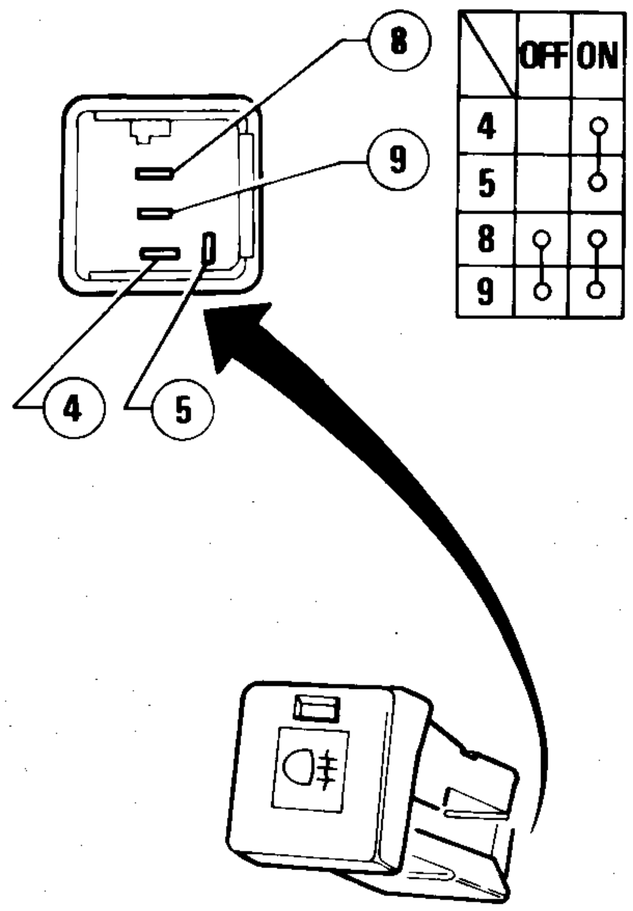

REAR FOG LIGHT SWITCH

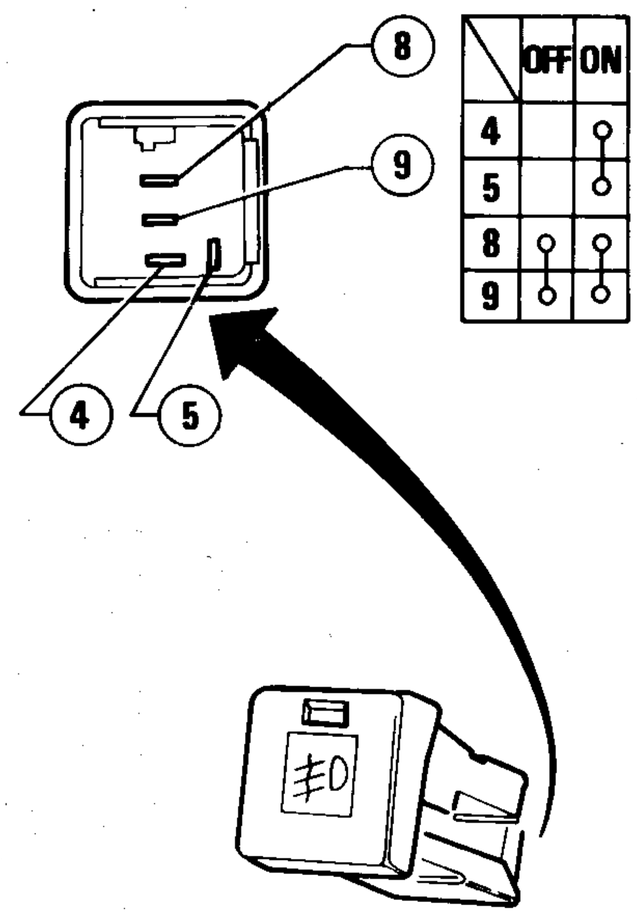

REAR FOG LAMPS

Location

The rear fog lamps are housed in the rear combination lamps (refer to: Rear Combination Lamps).

Replacement

To replace the rear fog lamps, refer to: Rear Combination Lamps - Lamp Replacement.

Location

This switch is located on the right-hand side of cluster (refer to: Group 66 - Dashboard).

Check

Check the switch correct functioning verifying that the continuity between terminals occurs as per the indications given in the table.

Location

This switch is located on the right-hand side of cluster (refer to: Group 66 - Dashboard).

Check

Check the switch correct functioning verifying that the continuity between terminals occurs as per the indications given in the table.

INSIDE LIGHTING *(wiring diagram)*

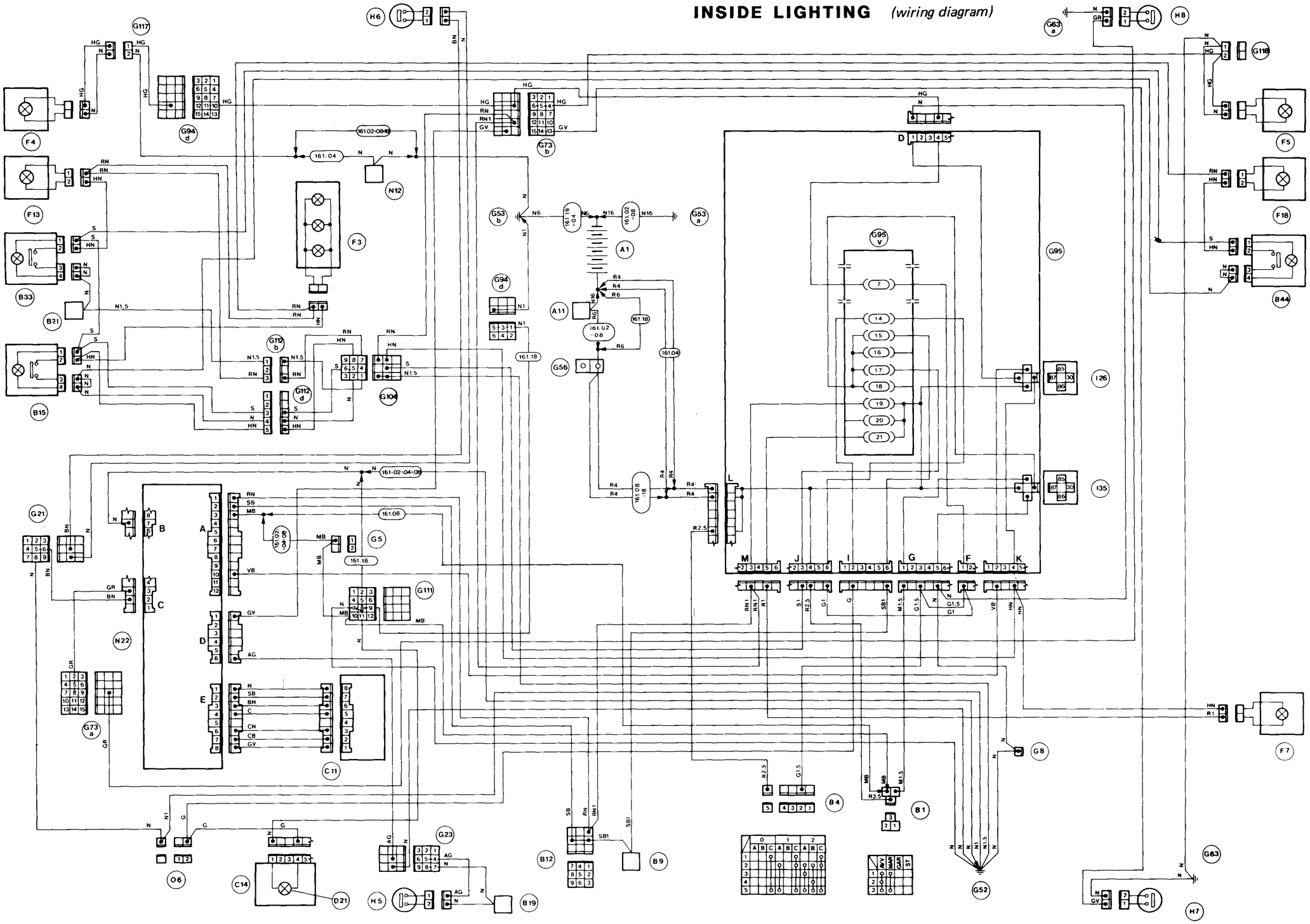

LAMPS UNDER RHEOSTAT

(wiring diagram)

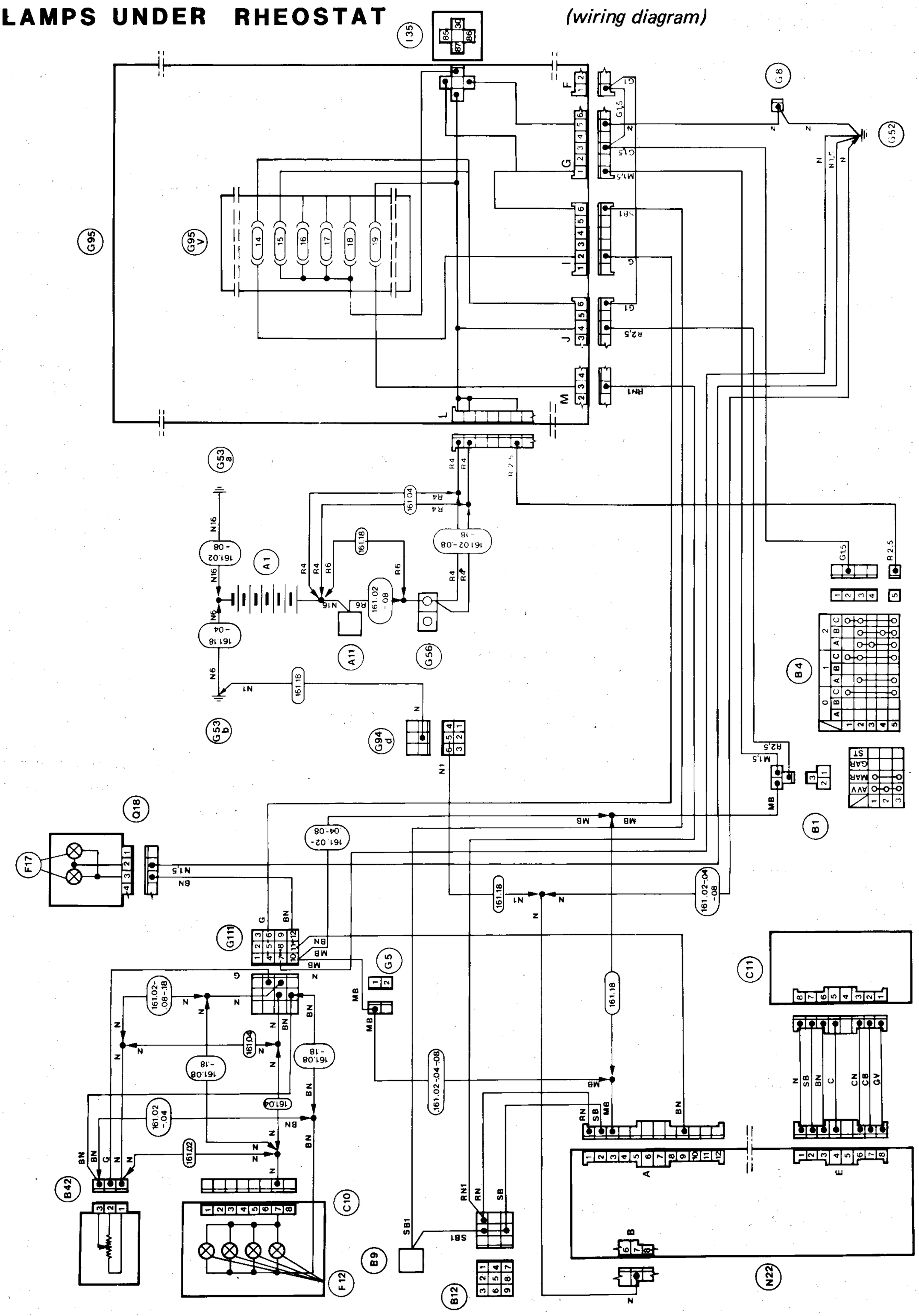

PASSENGER COMPARTMENT ROOF LAMP

Lamp replacement

1. Remove the transparent cover (1) which is pressure inserted in the lampholder (2), by means of a suitable tool.

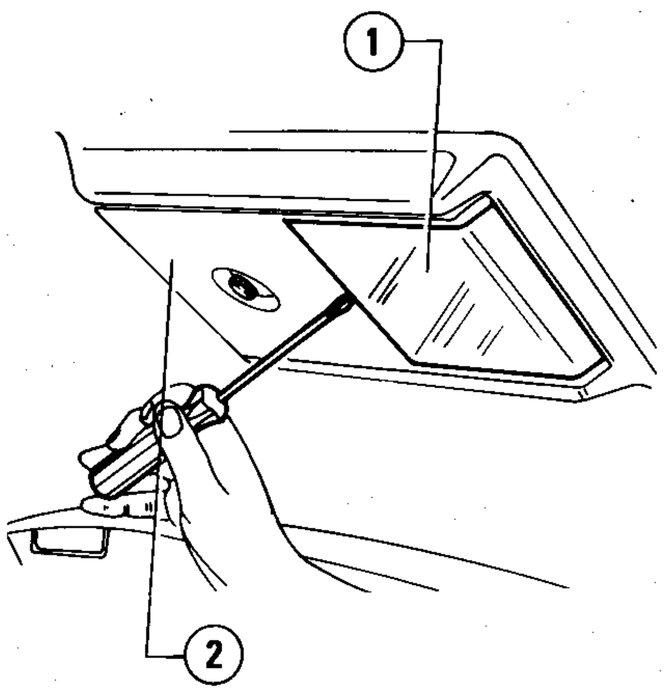

1 Transparent cover
2 Lampholder

2. Withdraw and replace the faulty lamp. Reinstall transparent cover.

FRONT AND REAR SPOT LIGHT

Lamp replacement

1. Remove the spot unit, which is pressure inserted into its seat on the longitudinal roof panel, by means of a suitable tool.

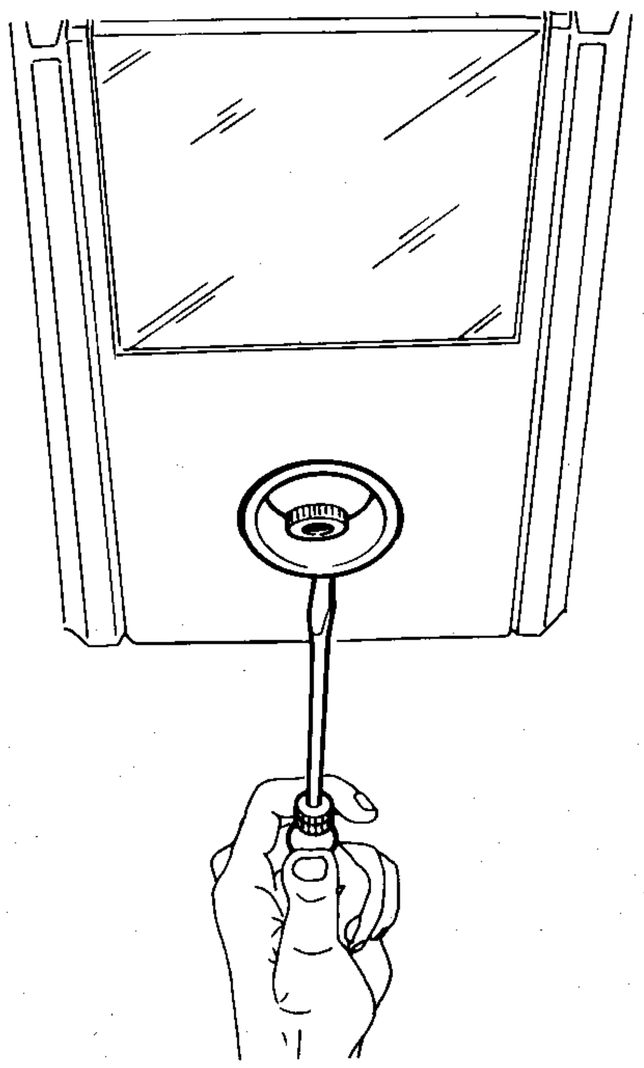

2. Unscrew lampholder (1) and remove it from the spot light.
3. Remove and replace the bulb, and install lampholder.
4. If required to remove the spot light, unscrew the two screws securing the components, and separate them.

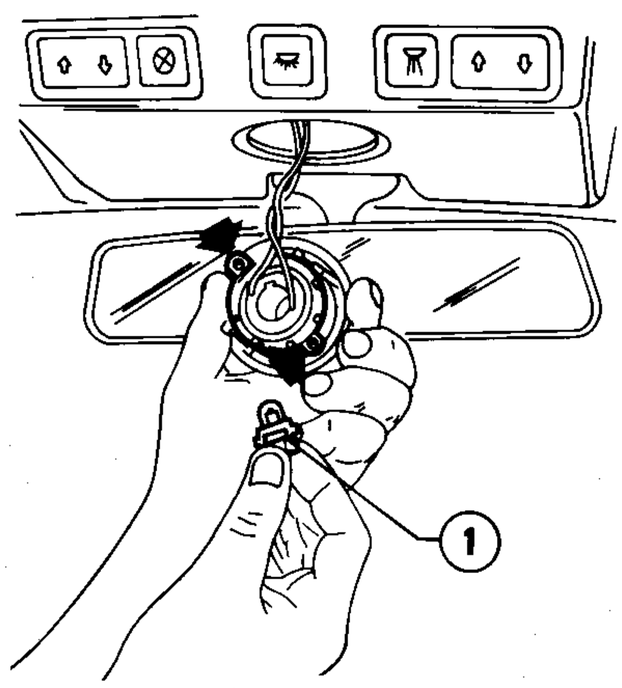

1 Lampholder

5. Install the spot by reversing the order of removal.

SWITCHES FOR PASSENGER COMPARTMENT ROOF LAMP AND SPOT

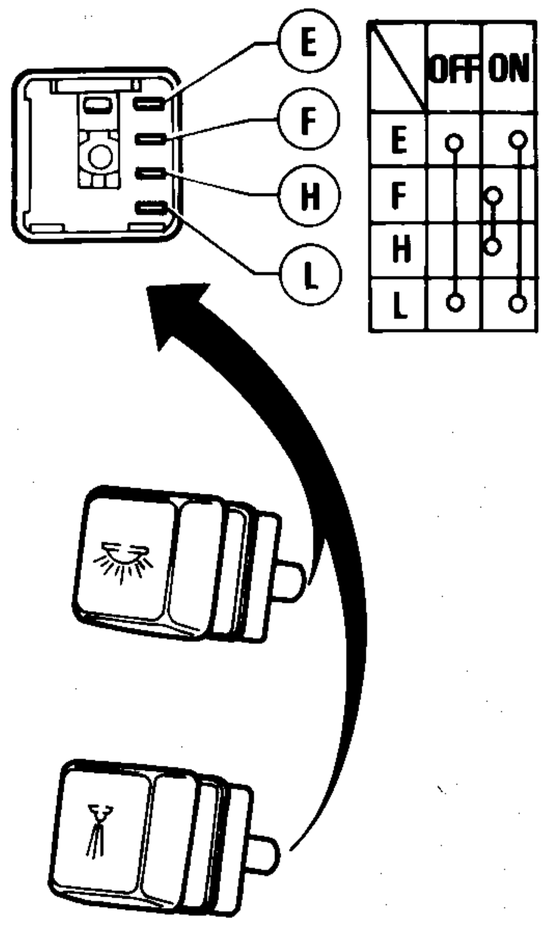

Location

The passenger compartment and spot light switches are located on the roof front panel; the central spot light switch is located on the roof central panel (refer to: Group 66 - Inside Trim - Roof Panel).
The following procedures are applicable for all switches.

Removal and installation

1. Using a suitable tool, remove the switch from its seat.
2. Disconnect wiring and remove the switch.

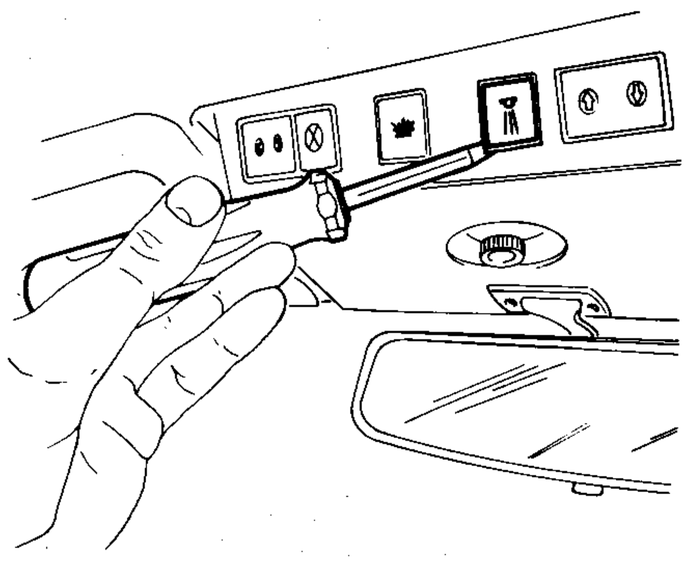

3. Install switch by reversing the order of removal, and pressure insert it into its seat.

CLUSTER RHEOSTAT

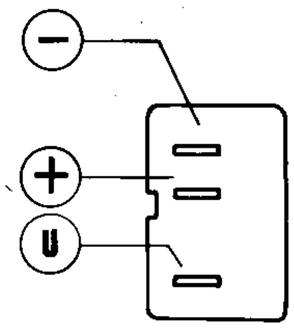

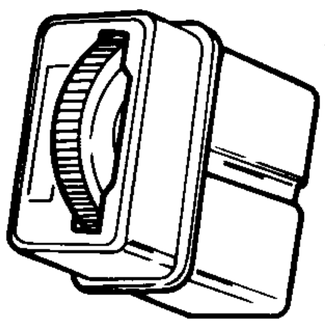

Location

It is located on the left-hand side of cluster (refer to: Group 66 - Dashboard).

Removal and installation

1. Remove cover from its seat (refer to: Group 66 - Dashboard - Removal and Installation).
2. Withdraw rheostat ① from rim ②.

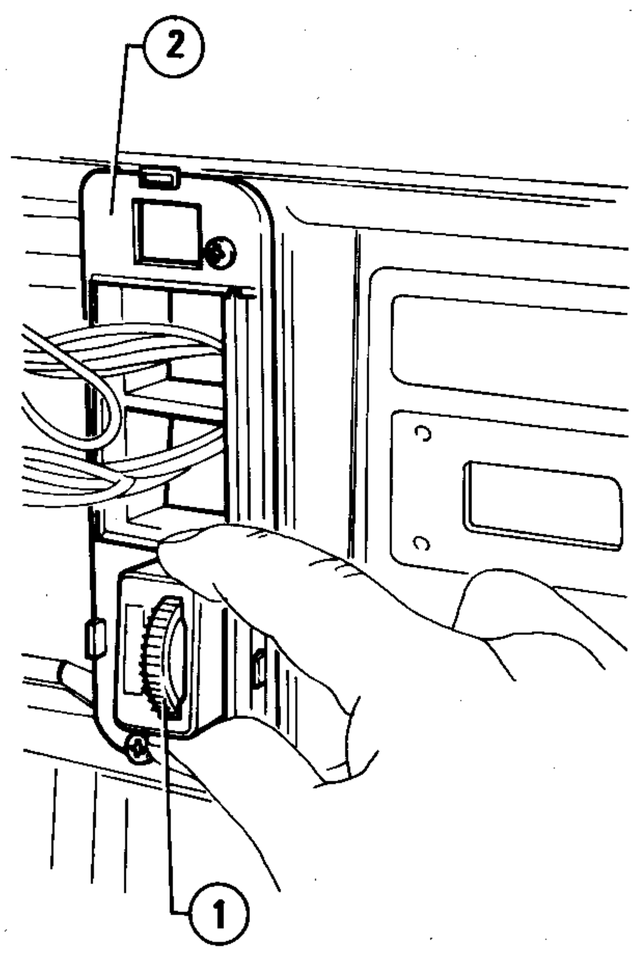

1 Rheostat
2 Rim

3. Carry out installation by reversing the order of removal.

Check

With the lights on and operating on cursor, verify that the brightness of the lamps under rheostat changes. If not so, replace the rheostat.

ENGINE COMPARTMENT LAMP

Lamp replacement

1. Open the bonnet and, by means of a suitable tool, remove the transparent strip, which is pressure-inserted in the bonnet itself.

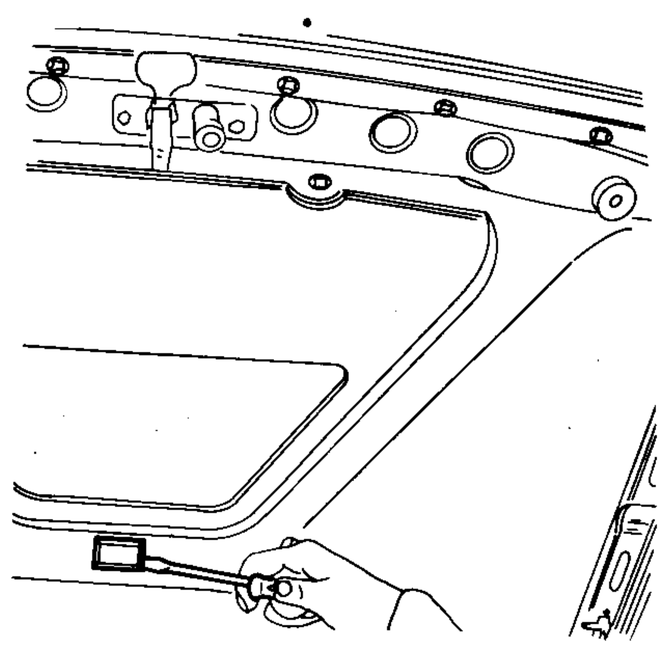

2. Withdraw and replace the lamp.
3. Install the transparent strip by reversing the order of removal.

LUGGAGE COMPARTMENT LAMP

Lamp replacement

1. Open the boot and, by means of a suitable tool, remove the lampholder, which is pressure-inserted in the body.

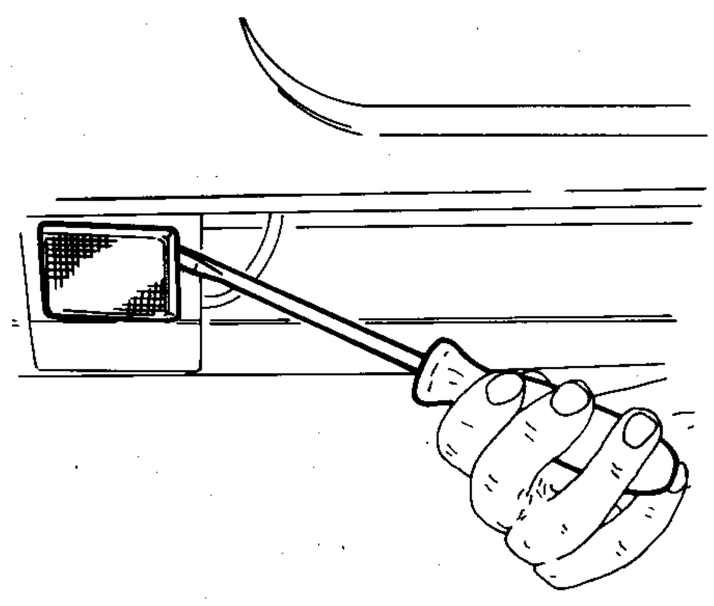

2. Withdraw and replace the lamp.
3. Install the lampholder by reversing the order of removal.

ENGINE COOLING DOWN, LUBRICATION, AND BRAKES AND CLUTCH LIQUID LEVEL

SENSOR AND SENDERS

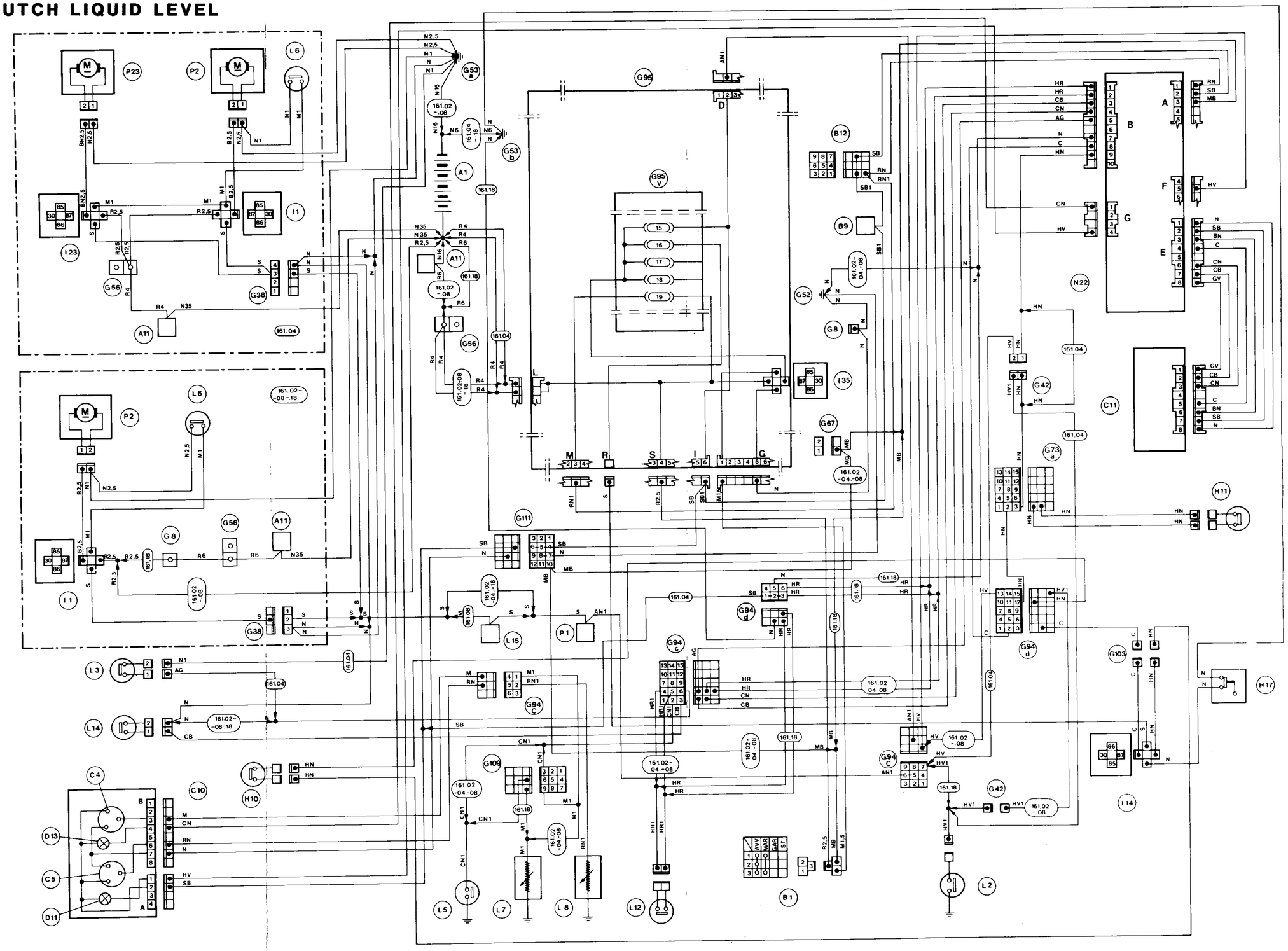

COOLANT LEVEL SENSOR

Location

It is inserted in the header tank of the cooling system.

Check

Connect a tester to the sensor connector as per the figure, and verify the following resistance values.

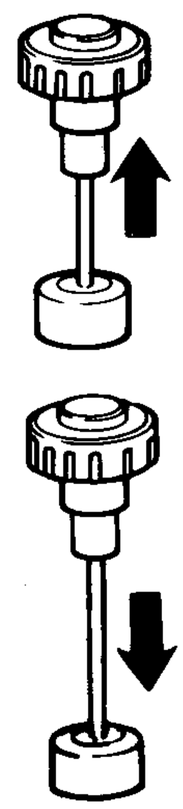

Float lifted
Resistance ≅ 0 Ω

Float lowered
Resistance = ∞

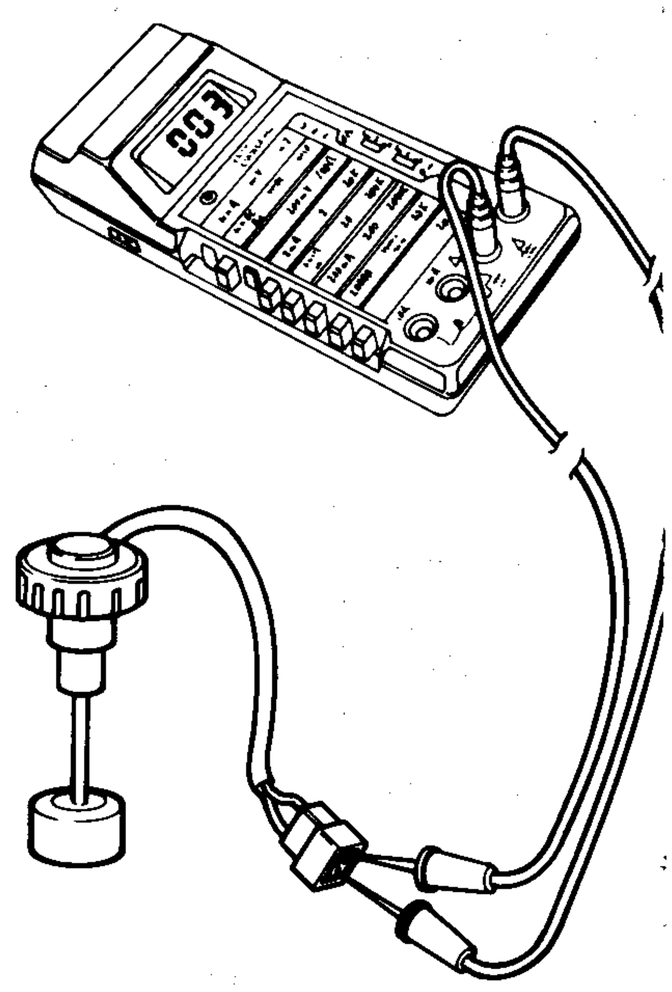

BRAKE AND CLUTCH FLUID MINIMUM LEVEL SENDER

Location

It is inserted in the brake and clutch fluid tank.

Check

1. Set the ignition key to the MAR position.

2. Connect a warning lamp to the pins of float plug, as shown in the figure.

3. Check the device proper functioning by verifying the following.

Float lifted:
warning lamp off
Float lowered:
warning lamp on

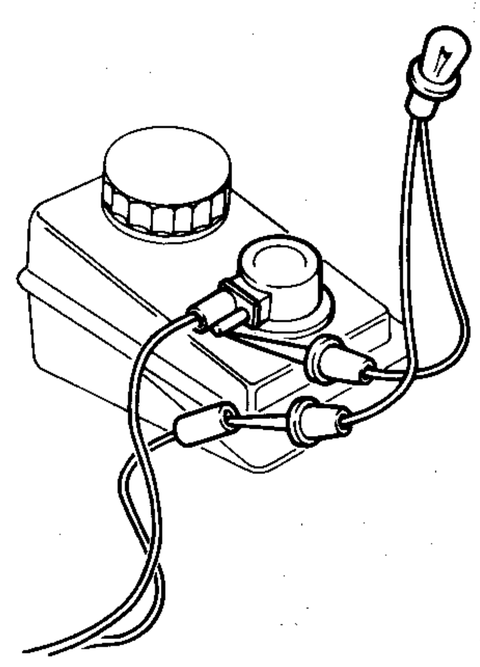

FUEL SUPPLY 1.6 1.8 2.0 *(wiring diagram)*

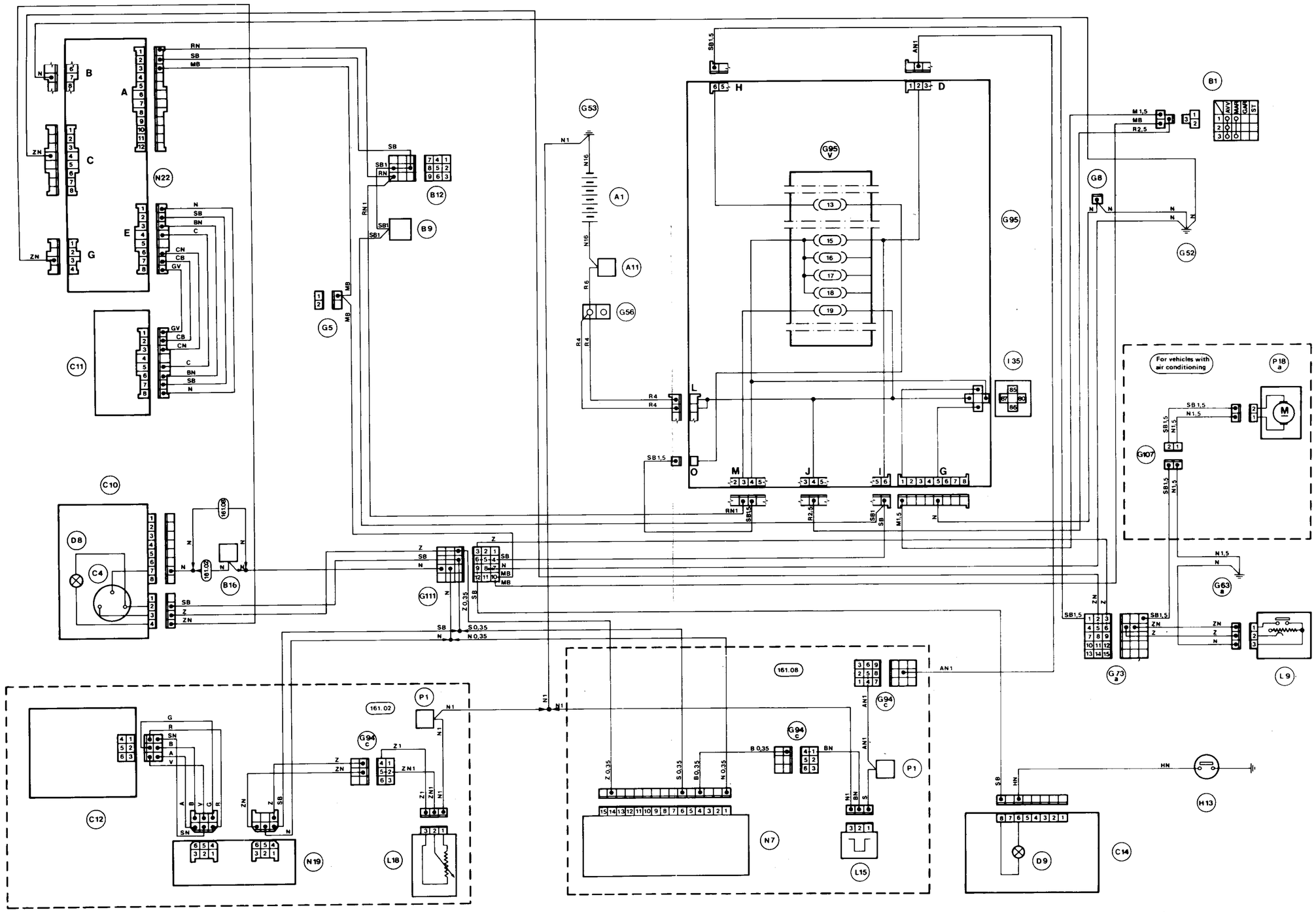

FUEL SUPPLY *(wiring diagram)*

6V iniezione

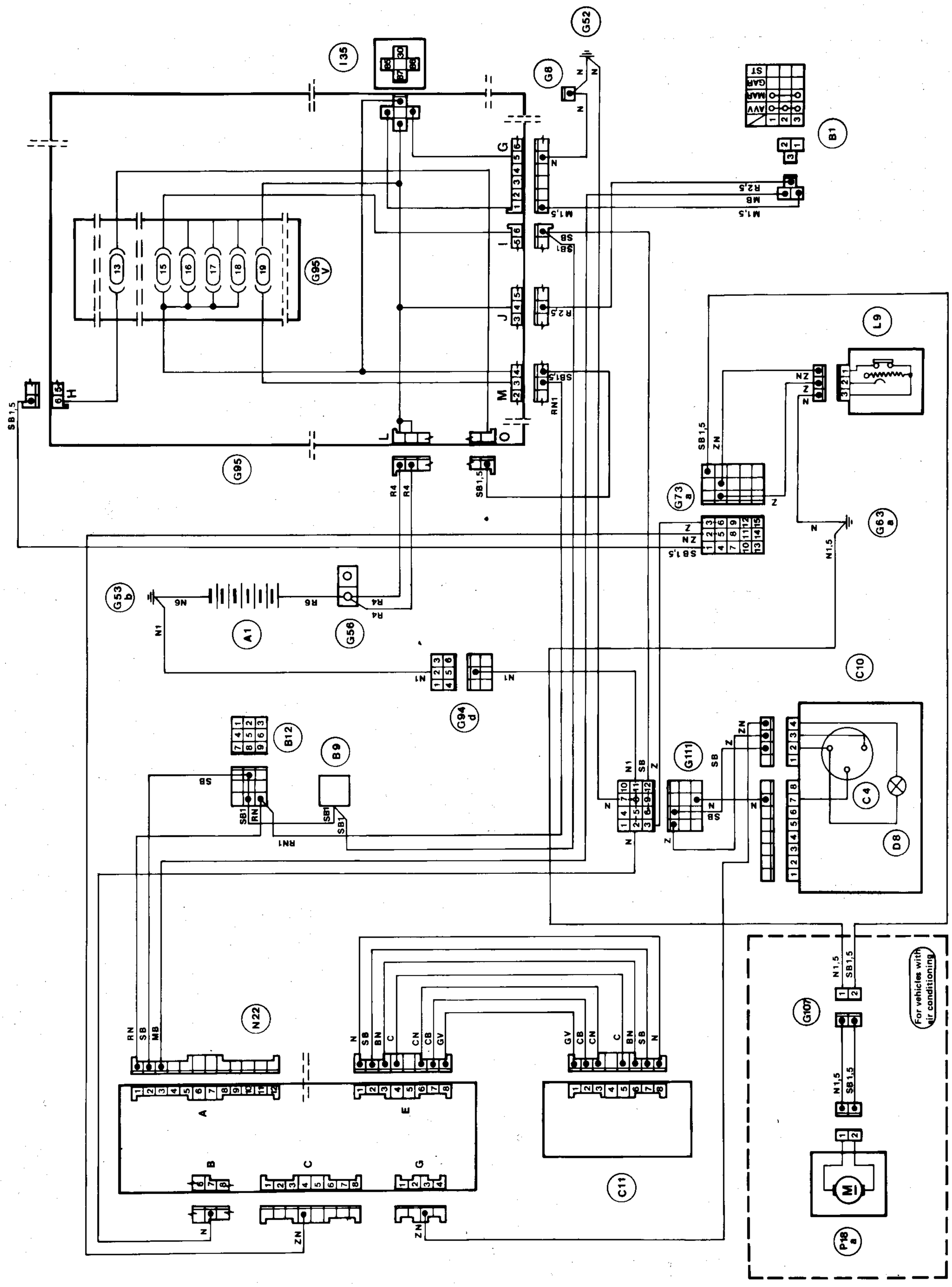

FUEL SUPPLY, REV COUNTER AND TACHYMETRIC SWITCH

2.0 turbodiesel

(wiring diagram)

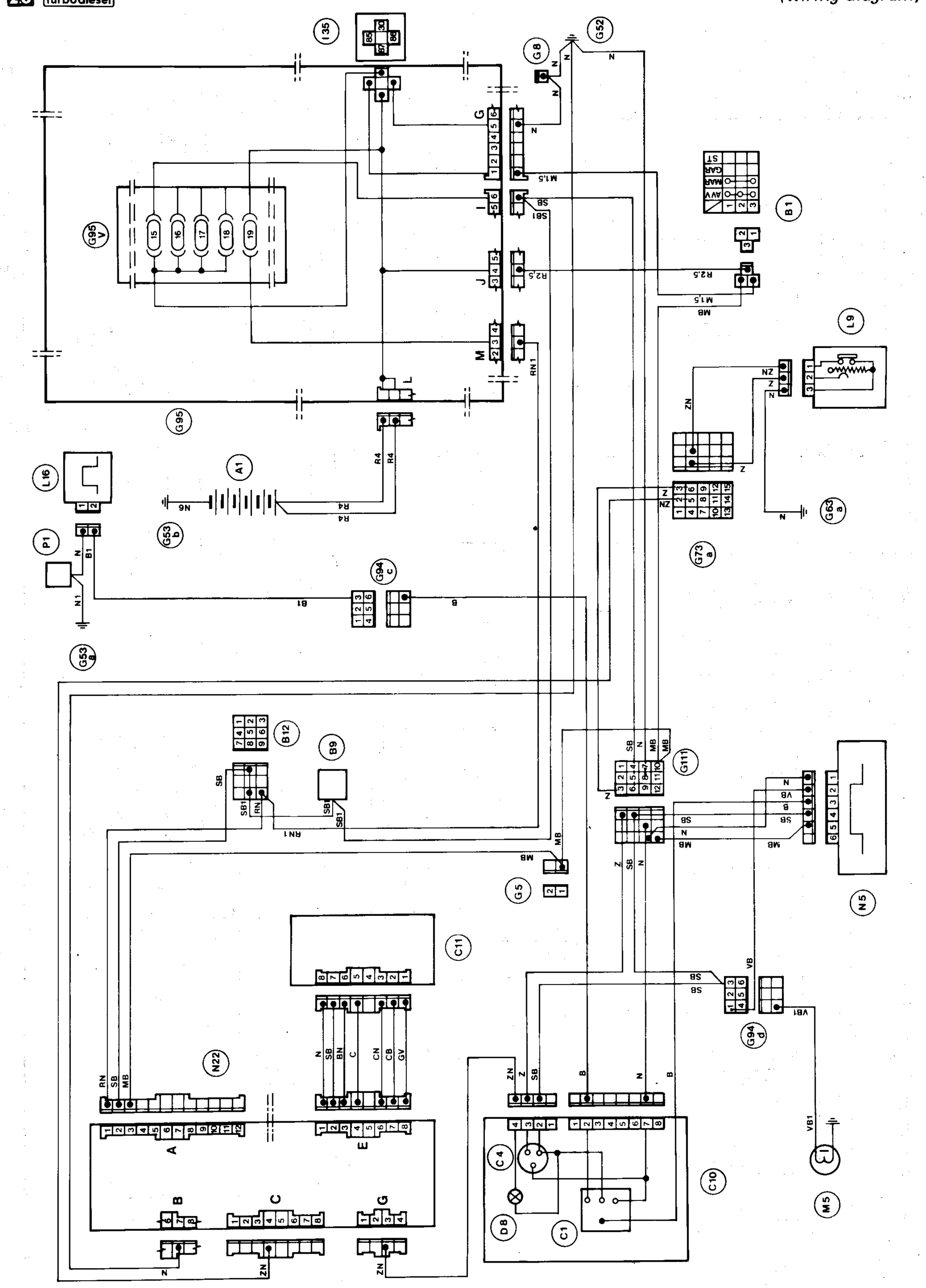

FUEL LEVEL INDICATOR SENDER

Location

The fuel level indicator sender is located on the right-hand side of passenger compartment.

Removal and installation

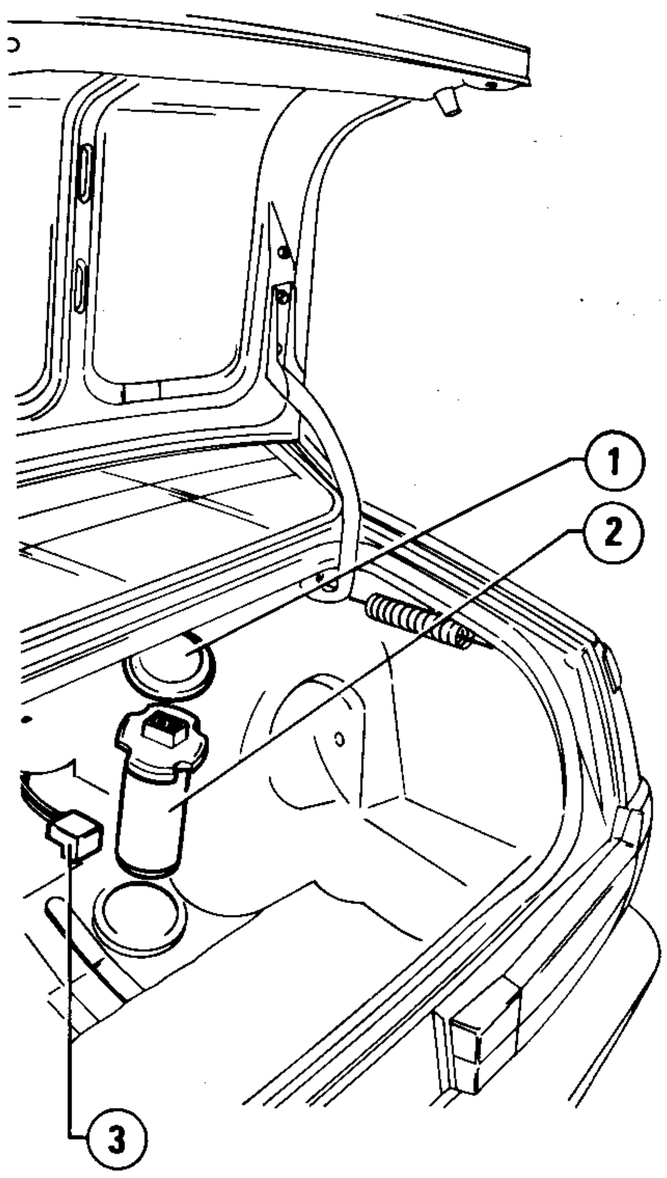

1 Plug
2 Fuel level indicator sender
3 Wiring

1. Remove the luggage compartment bottom trimming.
2. Remove the pressure-inserted plastic plug (1).
3. Disconnect sender wiring.
4. Rotate sender counterclockwise, and remove it from tank.
5. Install the sender by reversing the order of removal.

TACHYMETRIC SWITCH DEVICE

2.0 turbodiesel

Location

This device is located inside the dashboard, on the lid above the right-hand glove box.

Removal and installation

1. Remove the glove box.
Unscrew the three screws securing lid (1), and overturn it.

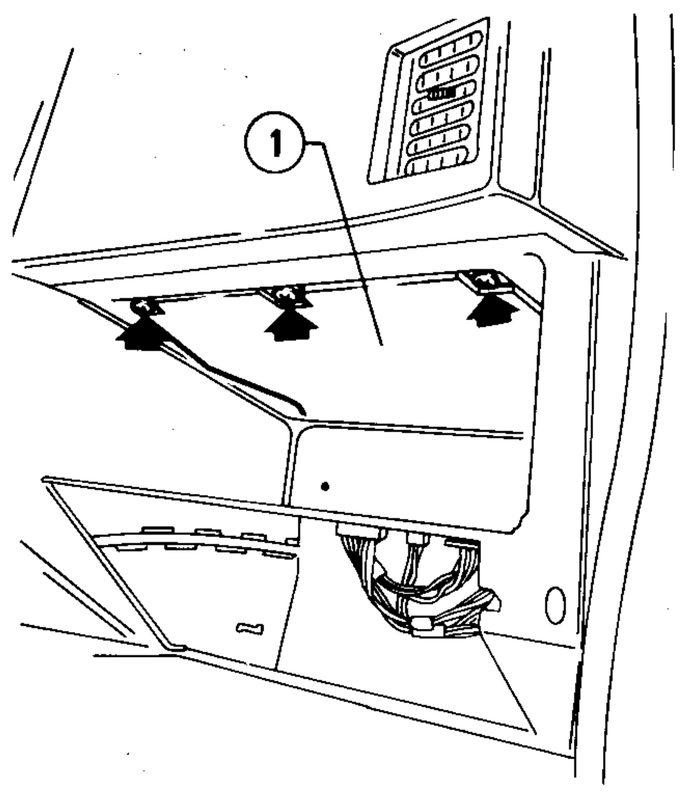

1 Lid

2. Unscrew the two nuts securing the tachymetric switch device (4), disconnect wiring (3), and remove the device.

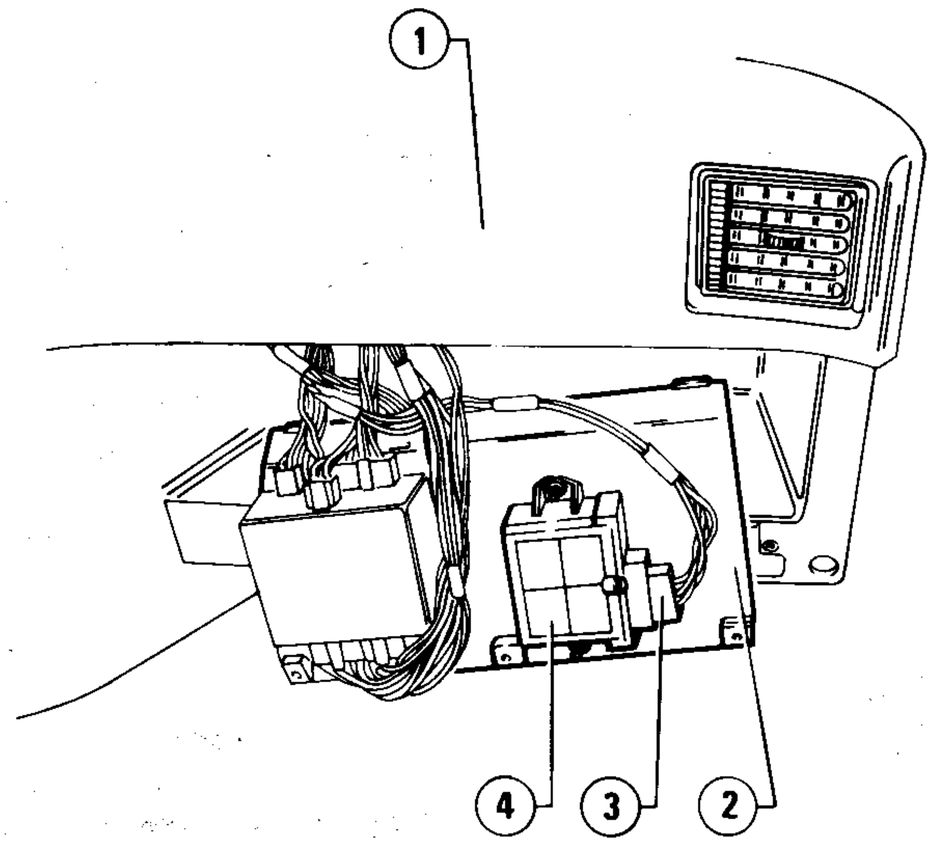

1 Dashboard
2 Lid
3 Wiring
4 Tachymetric switch device

3. Install the device on vehicle, by reversing the order of removal.

INJECTION CONTROL UNIT

6V iniezione

Location

It is located in the special compartment obtained in the front-hand side of vehicle floor.

Removal and installation

1. Lift the front left kickplate (3), unstuck a portion of the door frame rubber sealing (2), and lift floor trim (1), uncovering the injection control unit housing lid.

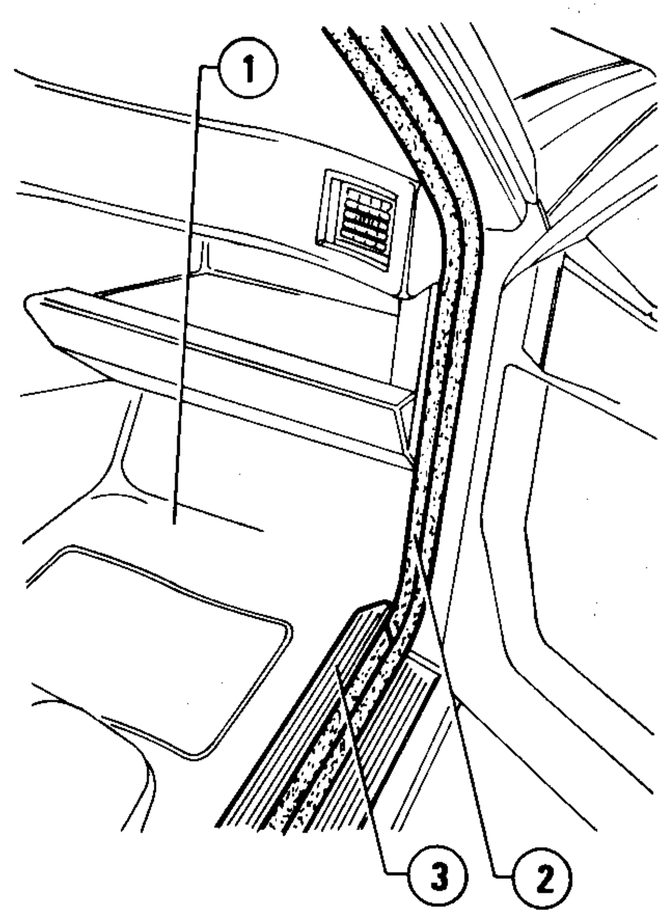

1 Floor trim
2 Door frame rubber sealing
3 Front left-hand kick plate

2. Unscrew the two nuts securing lid (1), and overturn it to gain access to control unit.

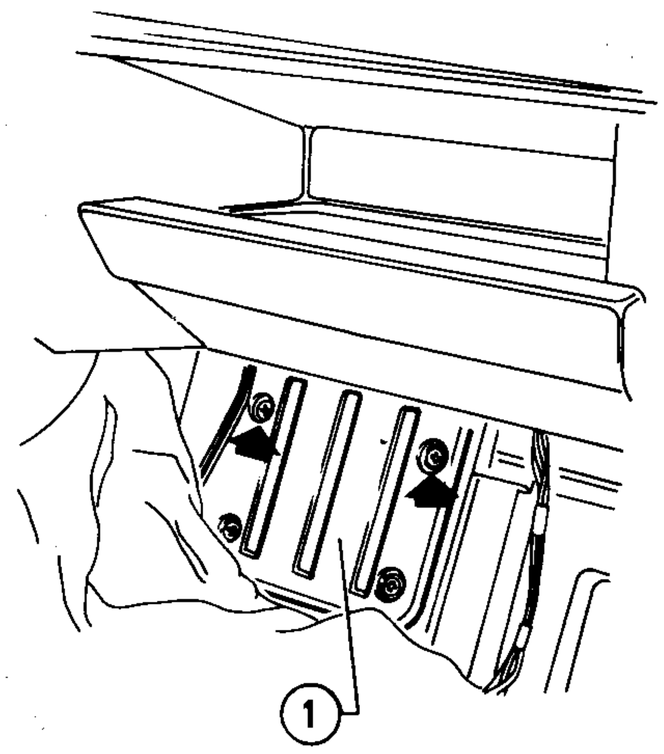

1 Lid

3. Unscrew the three nuts shown in the figure and remove injection control unit (2) from lid (1).

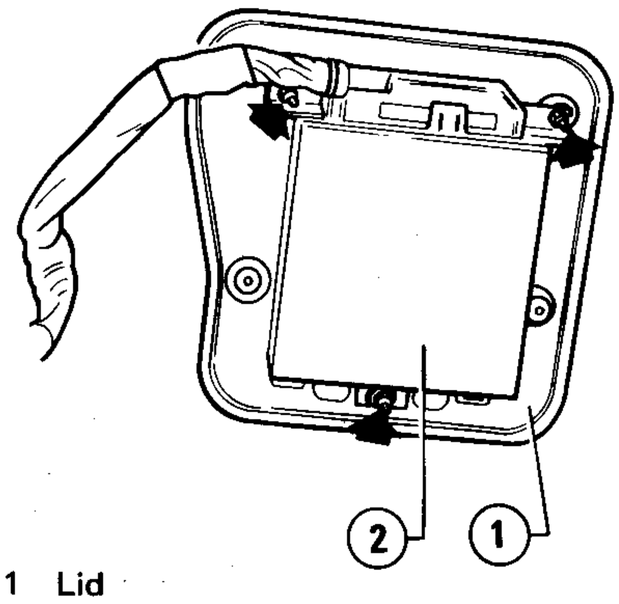

1 Lid
2 Injection control unit

4. Operate lever (1), and disconnect wiring (2) from injection control unit (3).

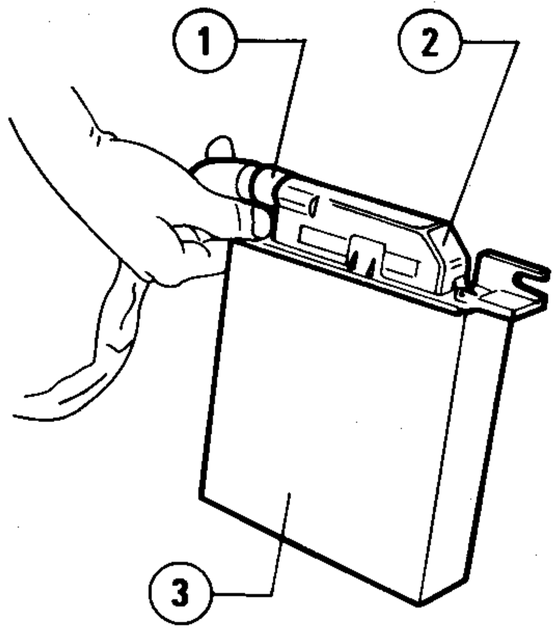

1 Lever
2 Wiring
3 Injection control unit

5. Install the injection control unit on vehicle, by reversing the order of removal, taking care to insert connector hook (1) correctly into its seat on the injection control unit.

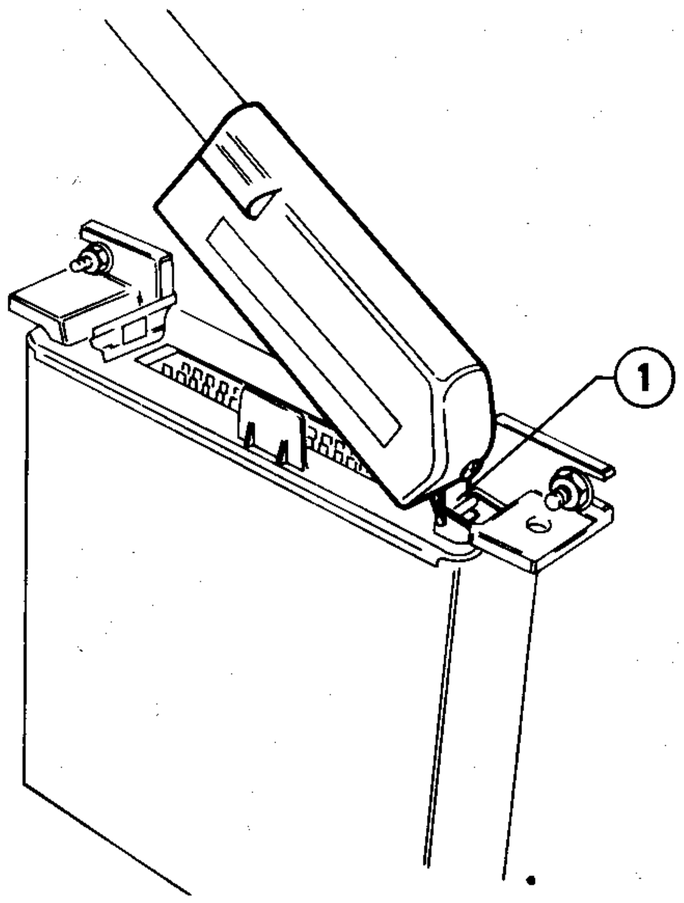

1 Hook

INERTIA-OPERATED SWITCH

(Vehicles 1.6 1.8 2.0 with air conditioner)

In the event of collision, this switch interrupts the electric supply of fuel pump.

Location

It is housed on right-hand side wall of luggage compartment.

Removal and installation

1. Disconnect the switch wiring.
2. Unscrew the two securing screws, and remove switch (1).

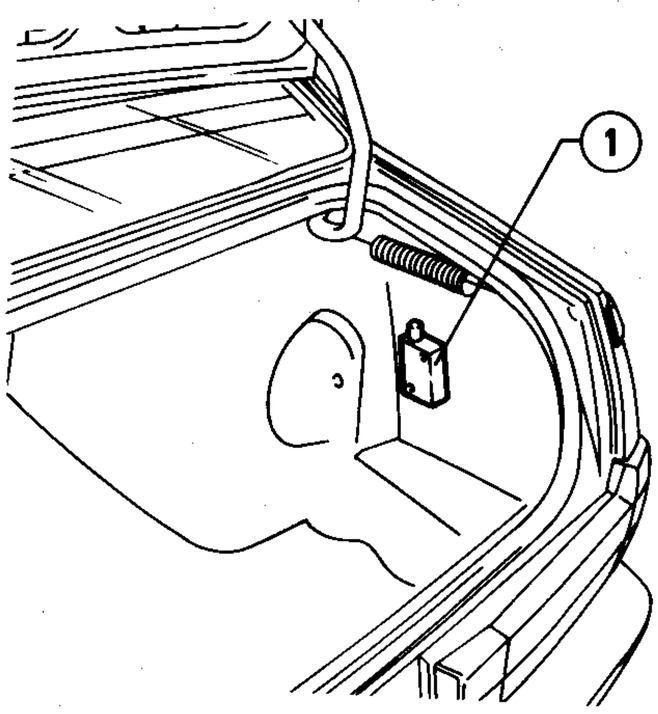

1 Inertia-operated switch

Check

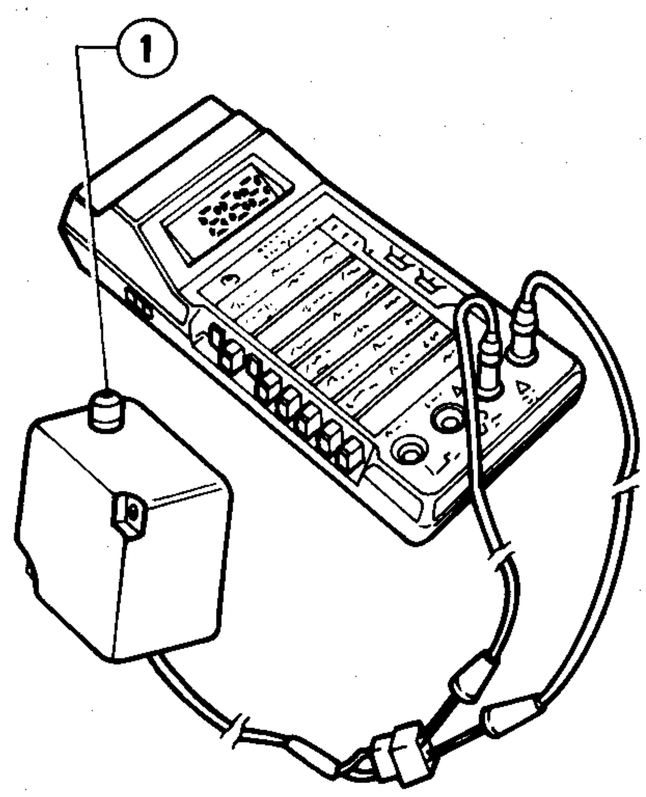

1 Re-activation pushbutton

Use a tester to check switch functioning. Operate as follows.

1. Lightly knock the switch, thus causing the device to be activated. In this condition, verify the resistance value by connecting tester as per figure.

After knock
Resistance value = ∞

2. Press the re-activation pushbutton (1) (see figure) and verify again the resistance value.

After re-activation
Resistance value ≅ 0

WINDSCREEN WASH/WIPE AND HEADLIGHT WASHER

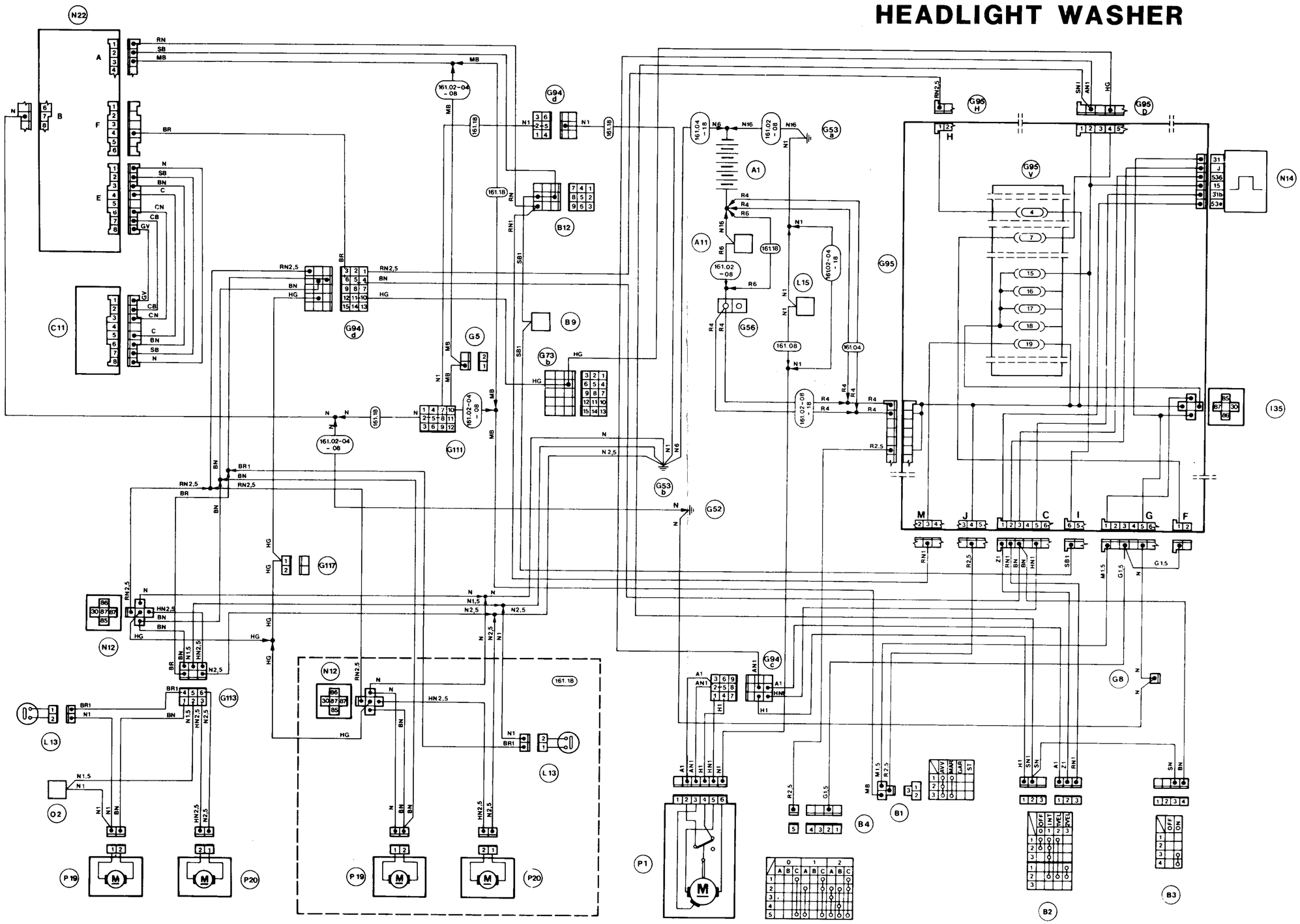

WINDSCREEN WIPER

1 Wiper blades
2 Wiper arm
3 Bevel bush
4 Nut
5 Spacers
6 Bulkhead
7 Levers
8 Motor
9 Nut

REMOVAL AND INSTALLATION

1. Remove blades (1) from wiper arms.

2. Lift the covers (3) of nuts securing wiper arms (2), unscrew the nuts and remove wiper arms.

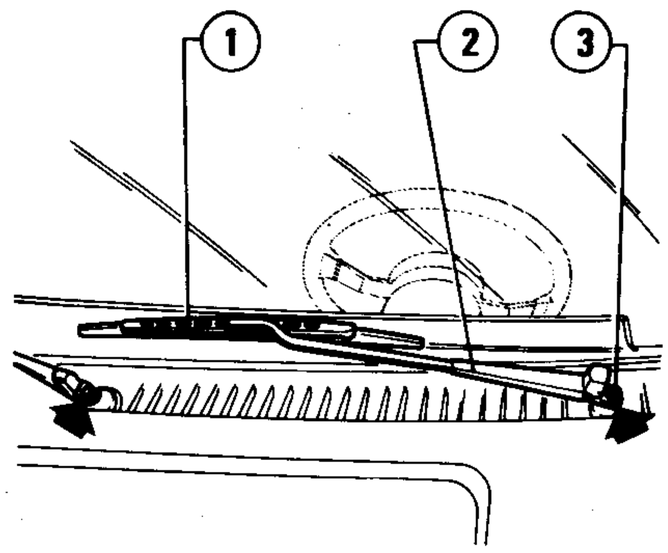

1 Wiper blades
2 Wiper arm
3 Guard

3. Open the bonnet and disconnect motor wiring (5).

4. Withdraw bush (1), unscrew nut (2) and remove it together with spacer (3).

5. Unscrew nut (4) which secures motor pin to linkage.

6. Unscrew the three screws securing bracket (6) to scuttle and motor (7). Remove both motor and windscreen wiper levers.

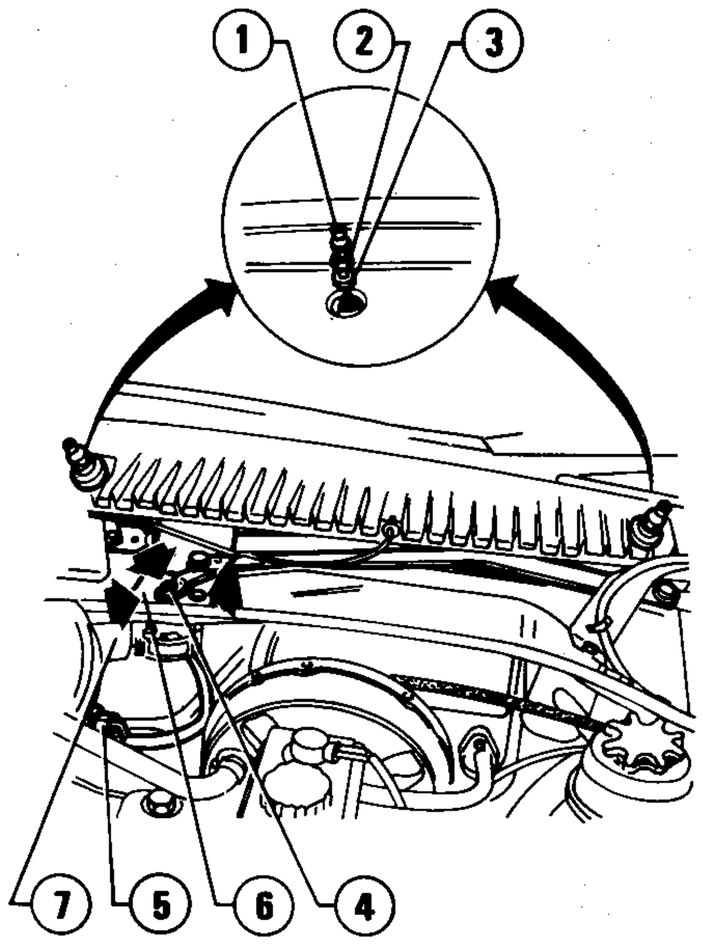

1 Bush
2 Nut
3 Spacer
4 Nut
5 Wiring
6 Bracket
7 Motor

7. Install the windscreen wiper by reversing the order of removal.

TROUBLE DIAGNOSIS AND CORRECTIONS

Condition	Probable cause	Corrective action
Windscreen wiper fails to operate	• Fuse blown	Replace fuse
	• Connection loosened or interrupted	Restore connection
	• Control contact faulty	Check combination switch unit (right-hand lever); replace if required
	• Foreign matter interrupts the correct movement of blades control levers	Remove foreign matter
	• Control rod disconnected	Connect control rod
	• Arm shaft seized	Replace arm shaft
Windscreen wiper operating speed too low	• Short circuit of motor armature	Replace motor
	• Blades worn or shaft seized	Replace blades
	• Supply voltage low	Check supply
	• Motor, if noisy	Replace motor
Windscreen wiper fails to stop correctly	• Stopper faulty	Replace stopper
	• Windscreen wiper motor faulty	Replace motor
Windscreen wiper fails to operate intermittently but operates at low and high speeds	• Windscreen wiper control faulty	Replace combination switch unit (right-hand lever)
	• Circuit faulty	Check the circuit
	• Intermittence device faulty	Replace intermittence device
Intermittence speed too low for proper wiping	• Stopper faulty	Replace stopper
	• Intermittence device faulty	Replace intermittence device
Intermittence speed too high for proper wiping	• Line voltage lower than 10 V	Restore line voltage correct value
	• Intermittence device faulty	Replace intermittence device
Intermittence speed changes incorrectly	• Windscreen wiper switch faulty	Replace combination switch unit (right - hand lever)
	• Circuit faulty	Check circuit
	• Windscreen wiper motor faulty	Replace motor
	• Intermittence device faulty	Replace intermittence device

WINDSCREEN AND HEADLIGHTS WASHERS

1.6 1.8 2.0 2.0 turbodiesel

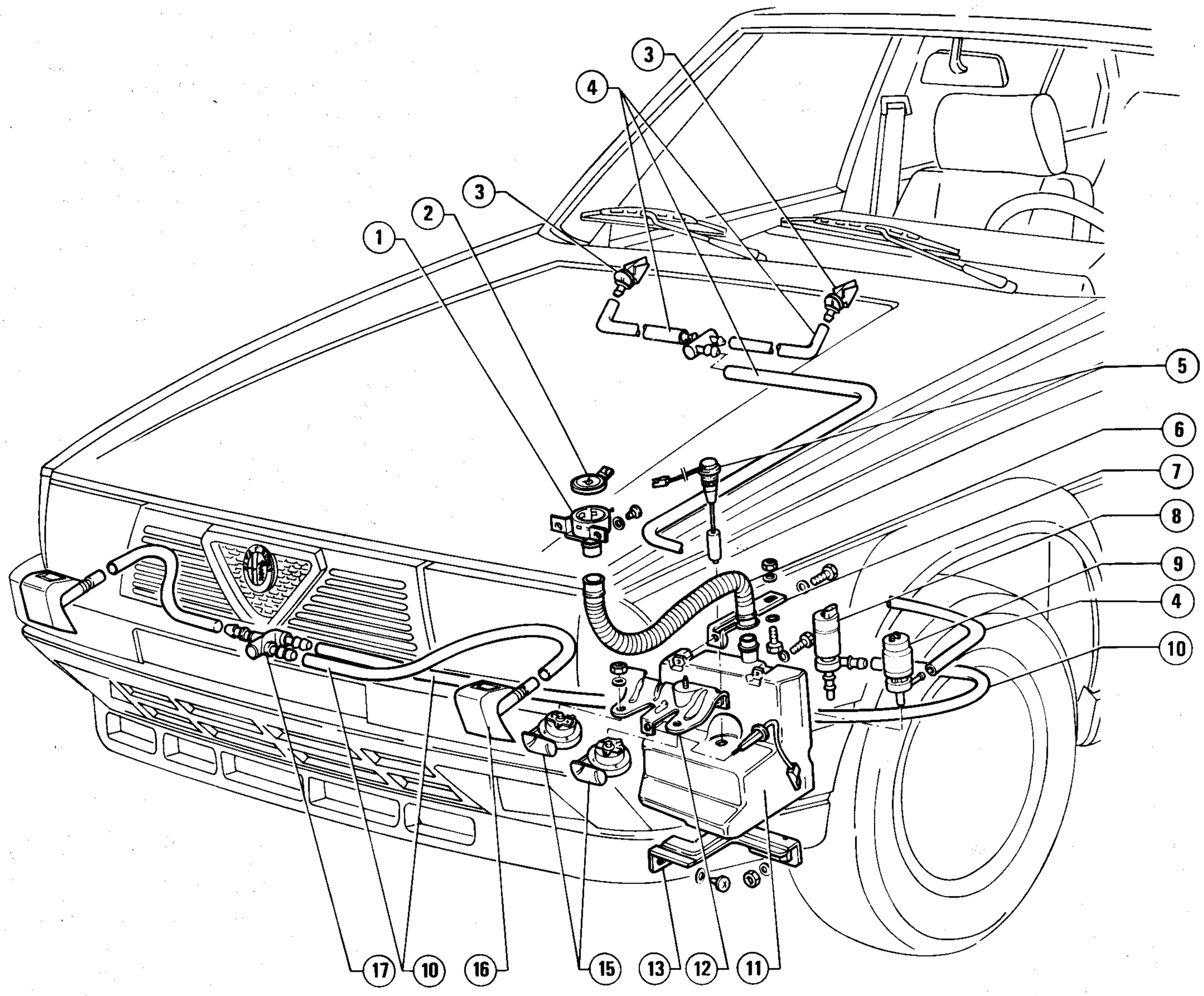

1 Tank filler
2 Cap
3 Windscreen washer spray nozzles
4 Windscreen washer piping
5 Liquid level sensor
6 Tank filler pipe
7 Bracket
8 Headlight washer electric pump (*)
9 Windscreen washer electric pump
10 Headlight washer piping (*)
11 Tank
12 Bracket
13 Bracket
14 Temperature sensor
15 Horns
16 Bumper guards with spray nozzles (*)
17 Headlight piping union

(*) Not standard for all models

TANK

Removal and installation

1.6 1.8 2.0 2.0 turbodiesel

1. Open the boot lid and unscrew the nut securing the windscreen washer tank.

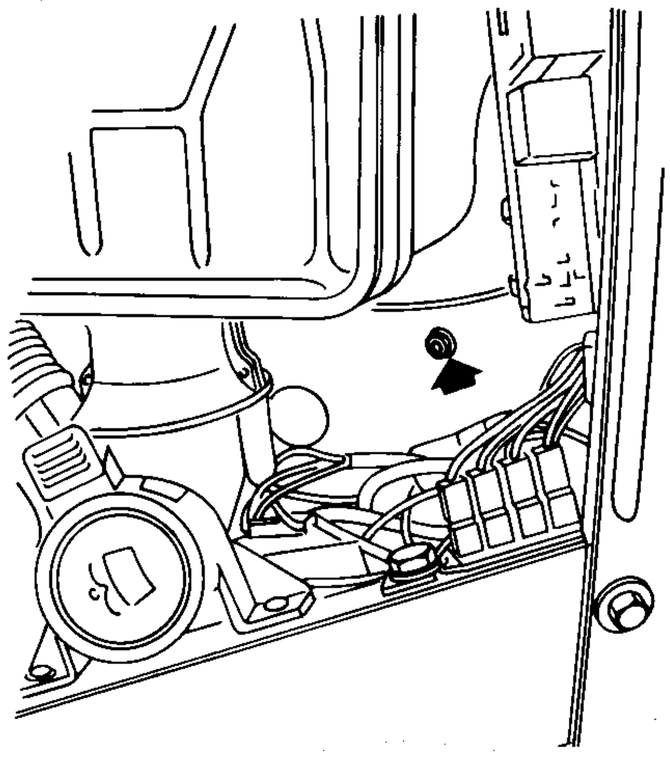

2. Operating from under the vehicle, unscrew the screw securing bracket (1) to body.

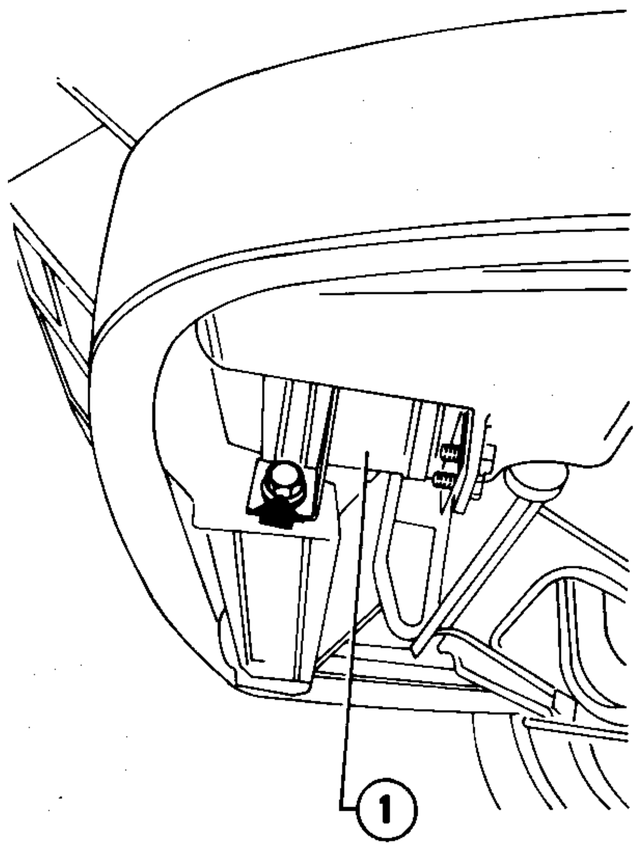

1 Tank support bracket

3. Slightly moving the tank, detach piping of windscreen washer electric pump and, if mounted, that of the headlight washer electric pump; then suitably plug pump delivery.
4. Unscrew the screw securing tank, positioned between tank itself and apron.
5. Carefully lower the tank and disconnect all wiring. Remove tank.
6. Install the tank by reversing the order of removal.

6V iniezione

As per Alfa 90

WINDSCREEN AND HEADLIGHT WASHER ELECTRIC PUMPS

The following procedure is applicable for both pumps.

Removal and installation

1.6 1.8 2.0 2.0 turbodiesel

1. Remove apron (refer to: Group 75 - Apron).
2. Operating from under the vehicle, detach the wiring and the delivery hose (3) taking care to prevent any leaks.
3. Remove pump (1), by withdrawing it from tank (2), plugging suitably the related hole.

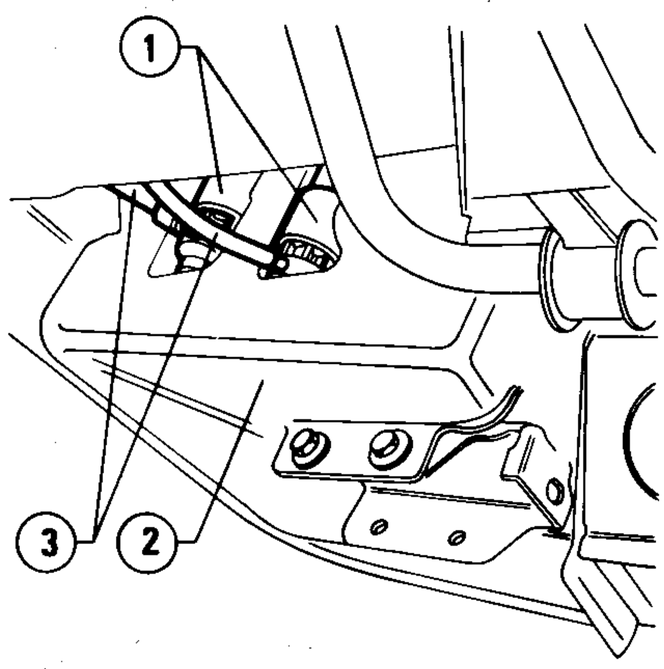

1 Electric pumps
2 Tank
3 Piping

4. Install the pump by reversing the order of removal.

6V iniezione

As per Alfa 90

WINDSCREEN/HEADLIGHT WASHER LIQUID LEVEL SENSOR

Location

The sensor is inserted in the windscreen/headlight washer liquid tank.

Check

1. Connect the two tips of a tester to the sensor connector, operating as per figure.
2. Check sensor functioning verifying the resistance values as shown in the figure.

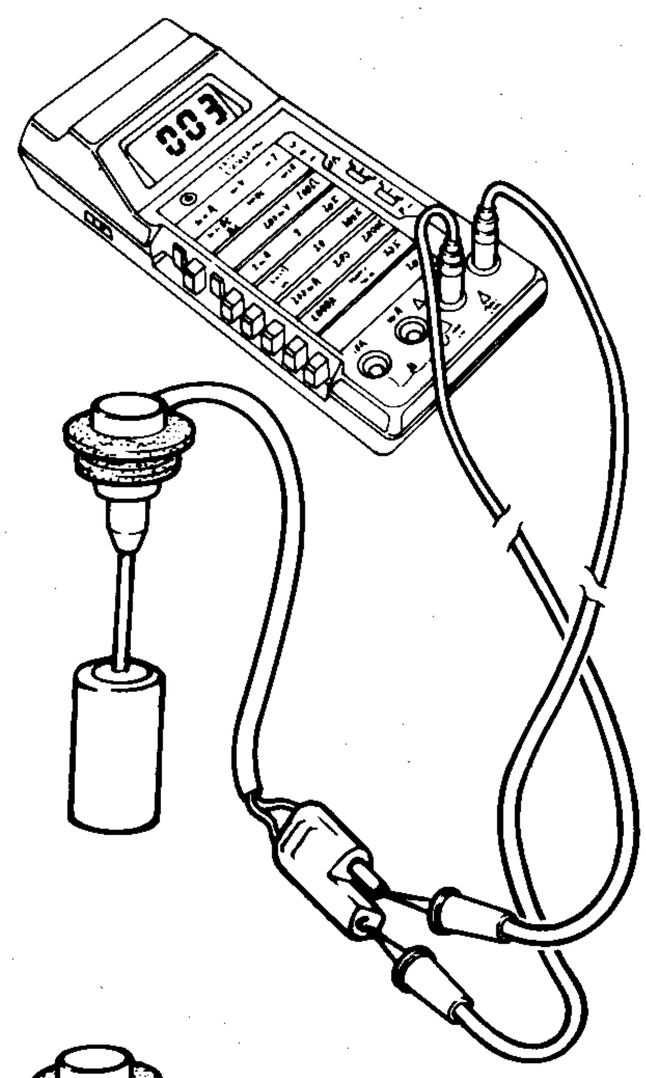

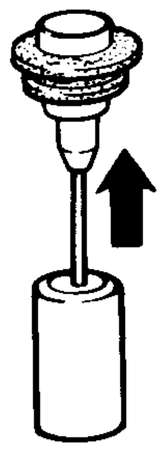

Float lifted
Resistance = 0 Ω

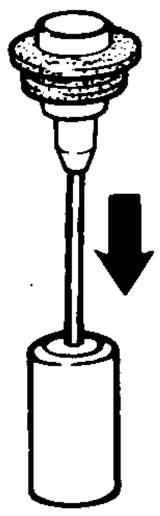

Float lowered
Resistance = ∞

ELECTRIC ACCESSORIES

HORNS AND HEATED REAR WINDOW *(wiring diagram)*

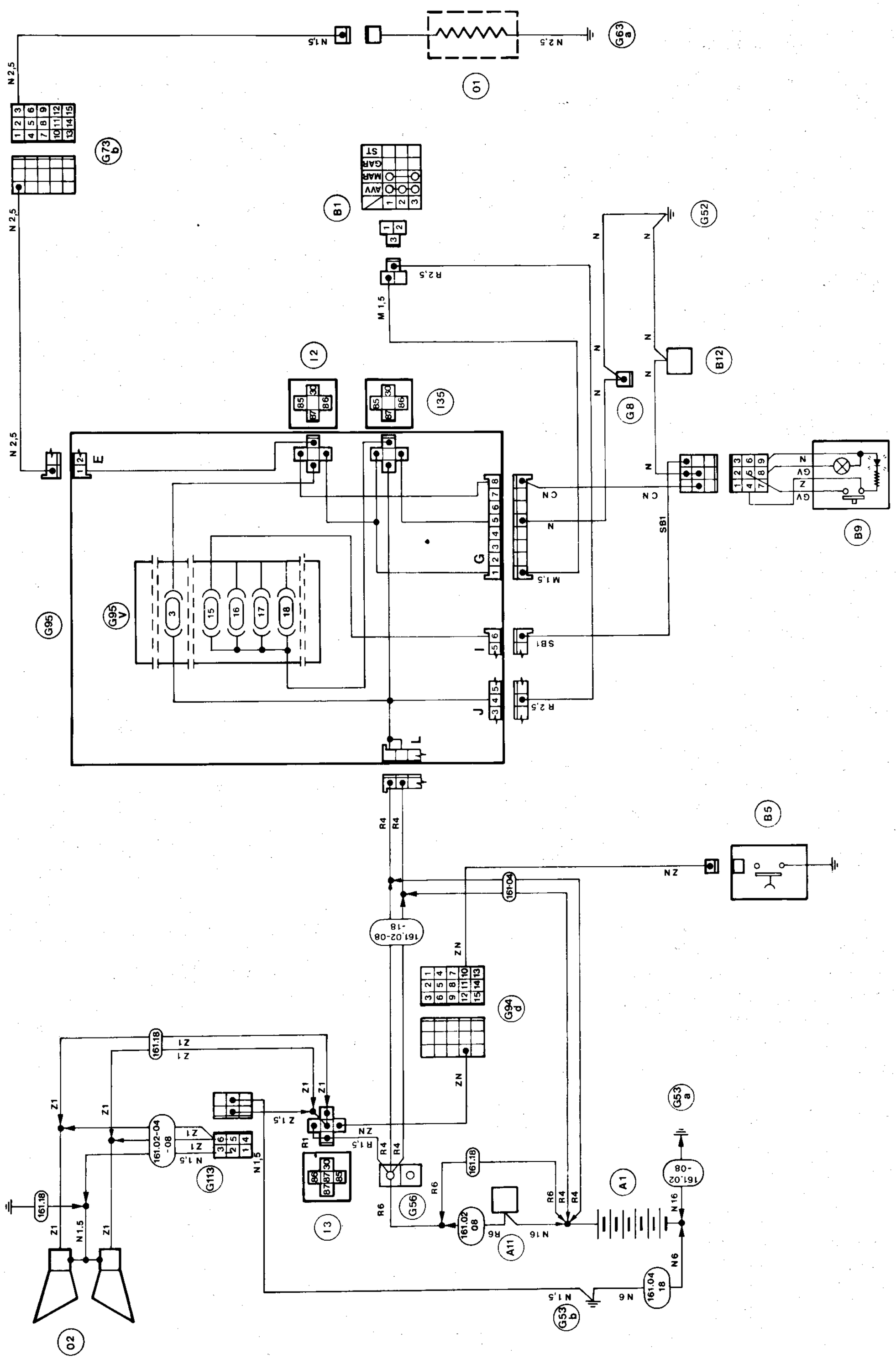

HORNS

Location

1.6 1.8 2.0 2.0 turbodiesel

They are mounted inside bumper, on the support bracket installed on windscreen/headlight washer tank.

6V iniezione

As per Alfa 90

Removal and installation

1.6 1.8 2.0 2.0 turbodiesel

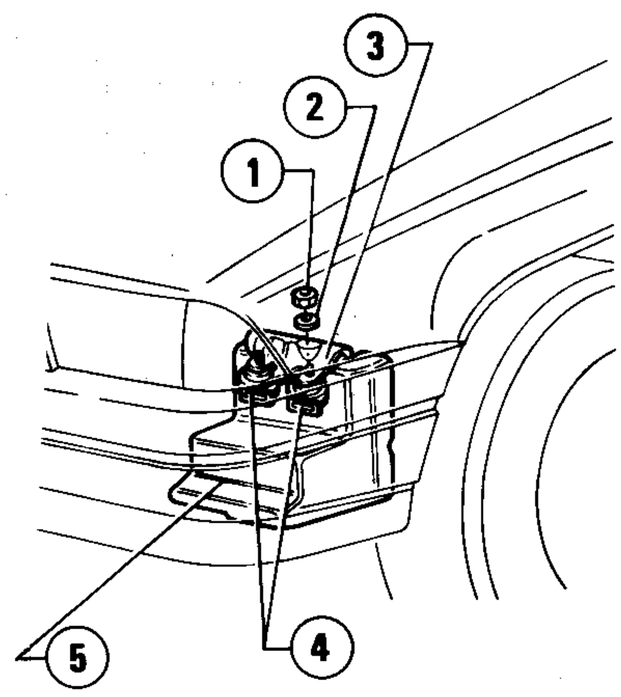

1 Nut
2 Washer
3 Support bracket
4 Horns
5 Windscreen washer tank

1. For an easier operation, set the vehicle on a lift.
2. Remove windscreen washer tank (refer to: Windscreen/Headlight Washer - Tank).
3. Unscrew the nut securing horns to support bracket; remove horns.
4. Install horns by reversing the order of removal.

6V iniezione

As per Alfa 90

HORNS CONTROL PUSHBUTTON

Location

It is located in the centre of steering wheel (refer to: WORKSHOP MANUAL - **mechanical units** - Group 23 - Steering Wheel and Column).

Check

1. Connect the tester tips to the pushbutton terminals, operating as per figure.
2. Check the pushbutton correct functioning, verifying the following resistance values:

Pushbutton released = ∞
Pushbutton pressed ≅ 0 Ω

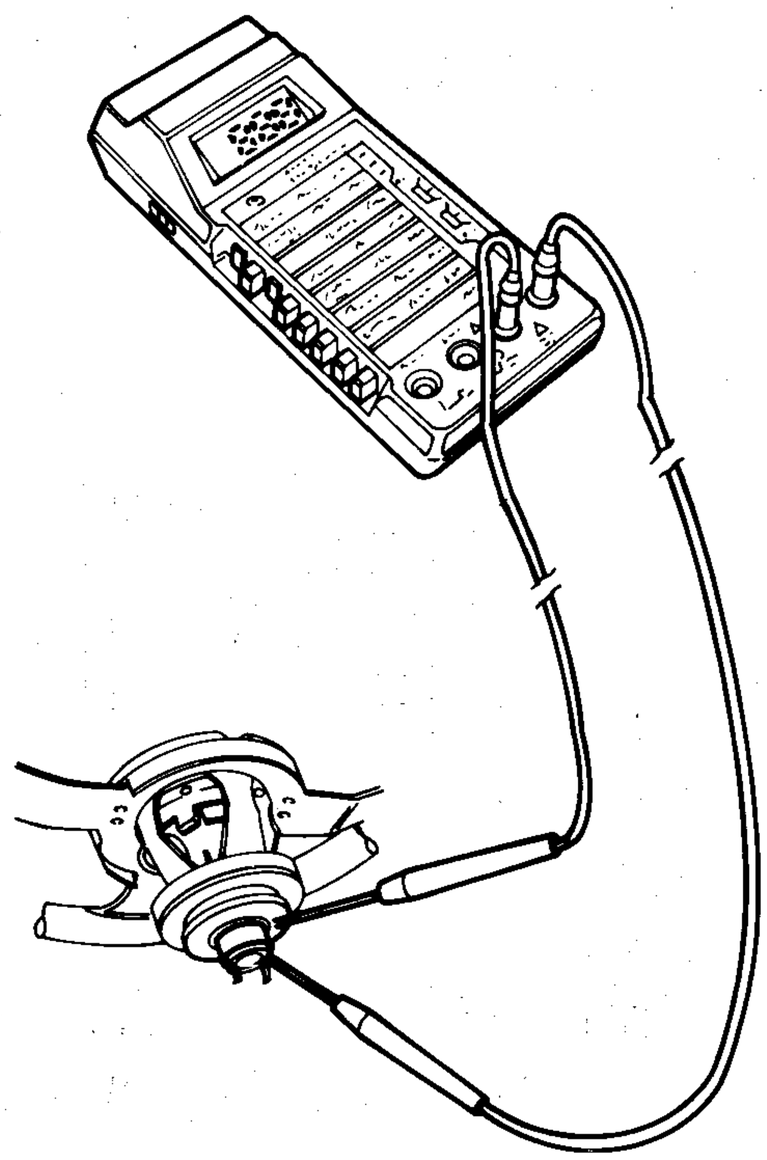

HORNS SETTING

Carry out the horns setting by operating on adjusting screw (1). At the end of the operation, let a drop of paint fall on the screw to tighten it.

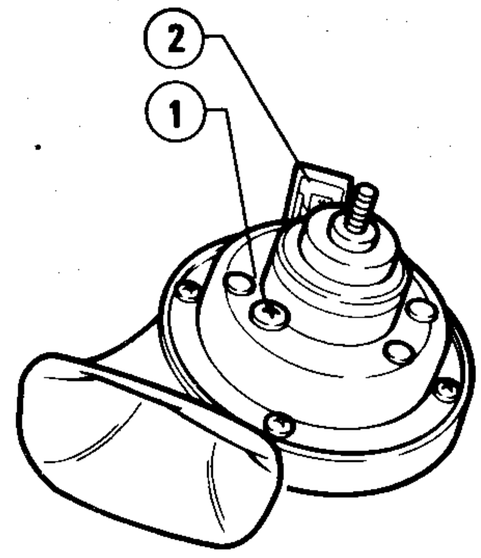

1 Adjusting screw
2 Connector

TROUBLE DIAGNOSIS AND CORRECTIONS

Before starting the trouble diagnosis operations verify proper functioning of both low and high horns.

Condition	Probable cause	Corrective action
One horn only operates	• One horn faulty • Electric connections loosened or faulty	Replace the faulty horn Restore connection continuity
Poor tone quality on one side	Tone adjustment incorrect	Adjust tone by operating on the related adjusting screw (Refer to: Horns Setting: item 1)
Both horns volume is low	• Battery charge poor • Alternator inefficient • Electric connections loosened or faulty	Recharge or replace battery Replace alternator Restore connection continuity
Both horns fail to operate	• Wiring interrupted • Control pushbutton faulty • Battery discharged • Horns faulty • Relay faulty	Restore wiring continuity Replace pushbutton Recharge battery Replace horns Replace relay

HEATED REAR WINDOW

HEATED REAR WINDOW SWITCH

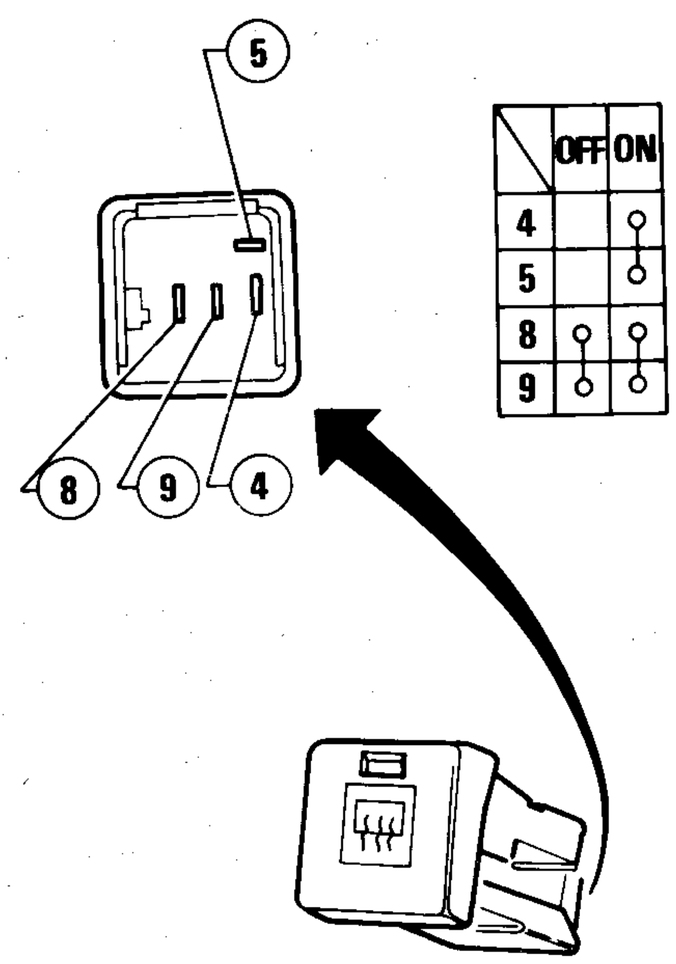

Location

This switch is inserted on the left-hand side of cluster (refer to: Group 66 - Dashboard).

Check

Check the switch functioning verifying that the continuity between terminals takes place in compliance with the indications given in the table.

HEATED REAR WINDOW FILAMENT

Check

Check filament good conditions operating as follows.

1. Activate the heated rear window.

2. Set one tester terminal (positioned on the Volt scale (V)) at the end and the other in the middle of each filament.

If the filament is in good conditions, the voltmeter indication must be **6 V.**

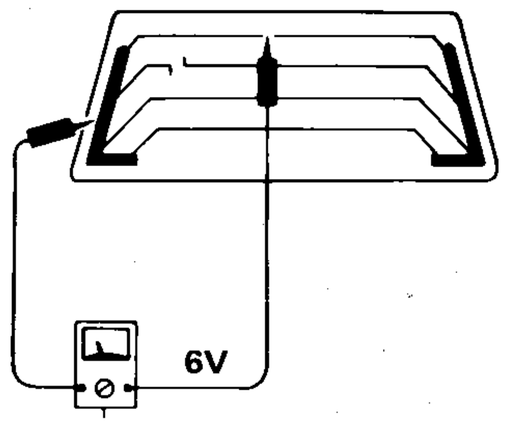

If the filament is interrupted, the voltmeter indication must be **0** or **12 Volt.**

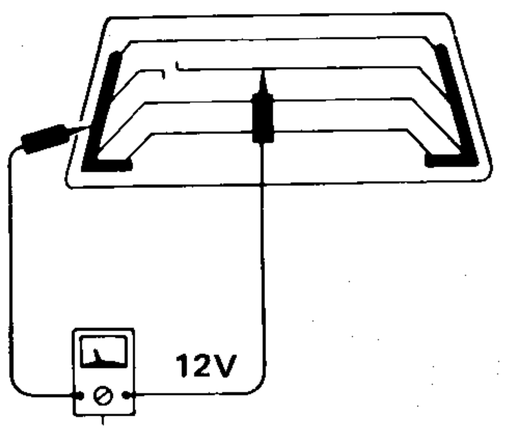

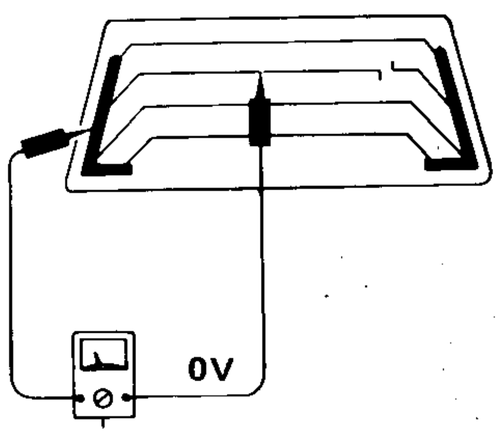

3. To identify the interruption, it is necessary to move the tester tip along the filament, and set in evidence the point in which the instrument index moves abruptly.

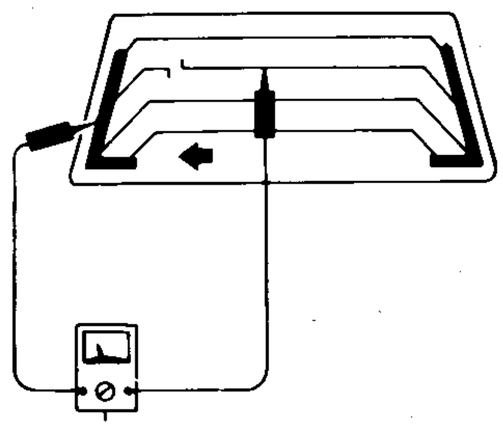

Or, after having verified that current flows properly to the heated rear window, check the filament electric continuity via the switching on of a warning lamp parallel-connected to the leads of the filament under check.

Filament repair

Tools and materials for the repair

1. Conductor silver compound
2. Ruler **(30 cm (11.8 in)** lenght)
3. Ruling pen
4. Heat gun
5. Alcohol
6. Cloth

Repair

1. Clean the wire and the surrounding area with a cloth soaked in alcohol.
2. Put a slight amount of conductor silver compound on the ruling pen end.

Shake the silver compound box before use.

3. Position a ruler on the rear window, in correspondence with the interrupted wire and, by means of the ruling pen, lay the silver compound so as to cover the wire in the interrupted area, on both sides, for about **5 mm (0.2 in).**

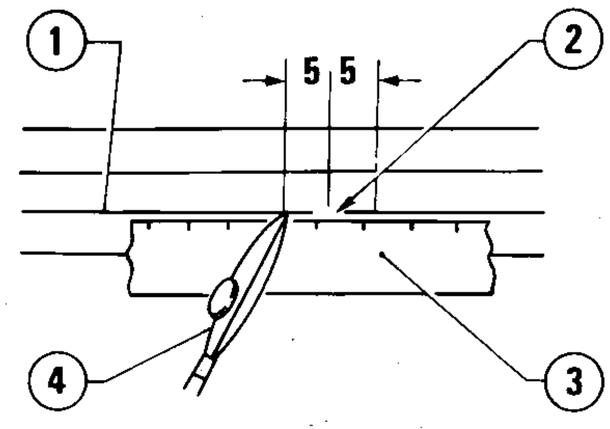

1 Filament
2 Interruption
3 Ruler
4 Ruling pen

4. Dry the ruling pen end in order to remove the silver compound residuous.
5. Once the repair has been carried out wait for about **10 minutes**, then verify the continuity of the wire concerned.

During the test, do not touch the repaired filament.

6. Heat the repaired area with a hot air jet for about **20 minutes**, keeping the heat-gun orifice at about **3 cm (1.18 in)** from the surface. If a heat-gun is not available, let dry for **24 hours.**

POWER WINDOWS *(wiring diagram)*

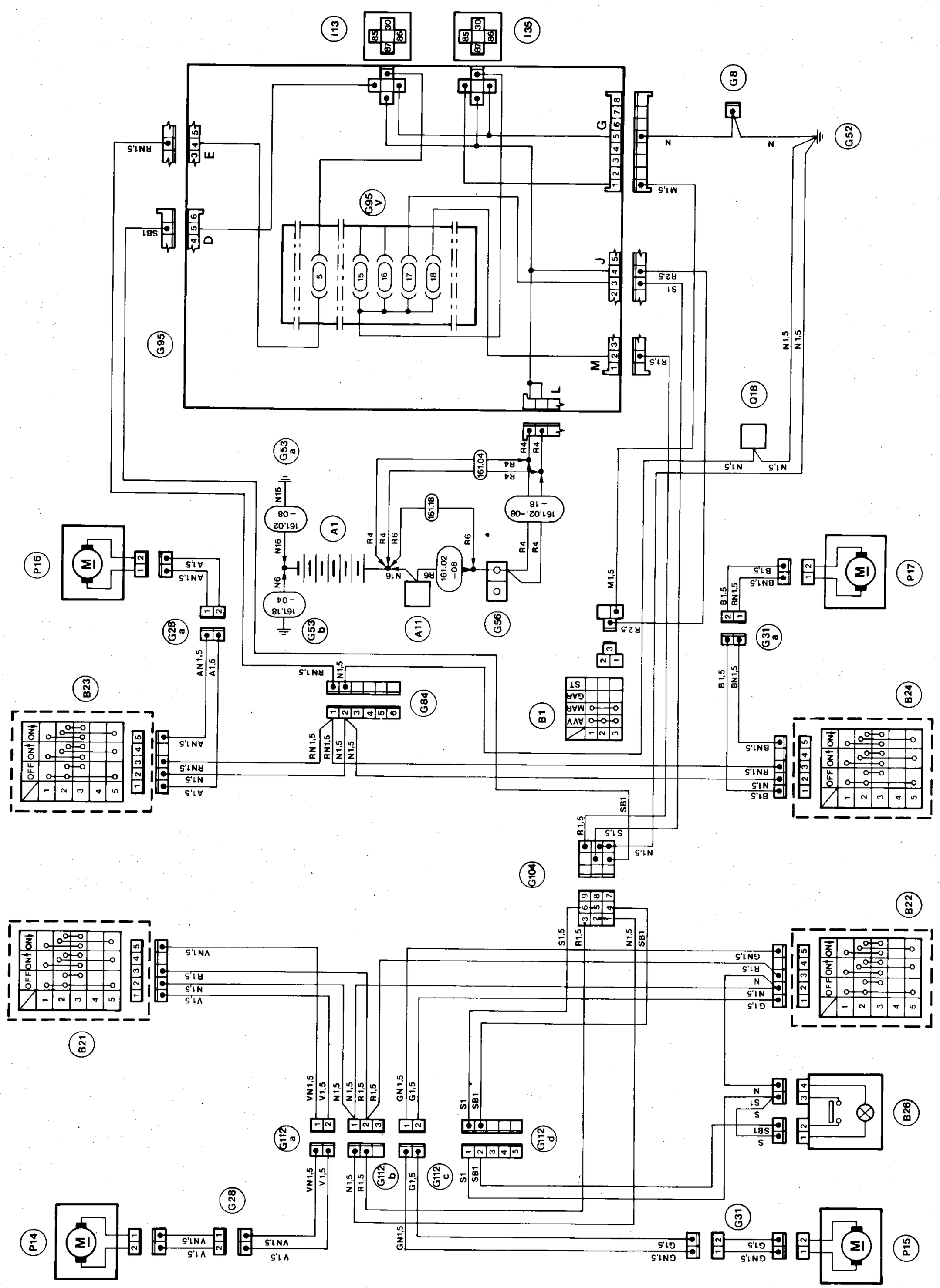

POWER WINDOWS SWITCHES

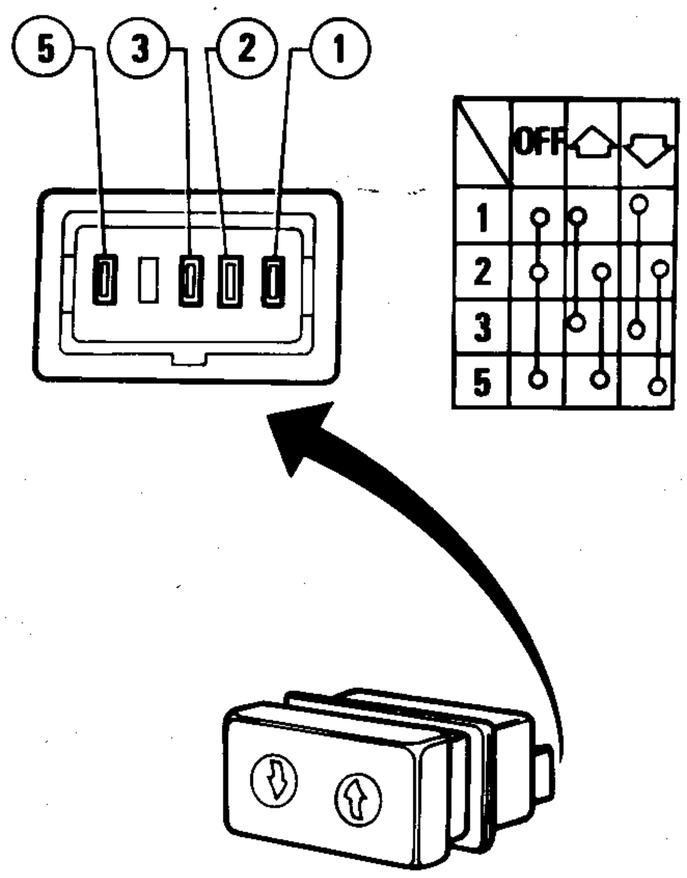

Location

The two switches of front power windows, are inserted in the roof front panel (refer to: Group 66 - Internal Trimming - Roof).
The two switches of rear power windows, are inserted in the rear part of central console (refer to: Group 66 - Consoles - Central Console).
The following procedures are applicable for all switches.

Removal and installation

1. By means of a suitable tool, withdraw the switch casing from its seat on the roof panel, detach wiring and remove the switch.
2. Install the switch by reversing the order of removal, and pressure-insert it into its seat.

Check

Check the switch functioning verifying that the electric continuity between terminals occurs in compliance with the indications given in the table.

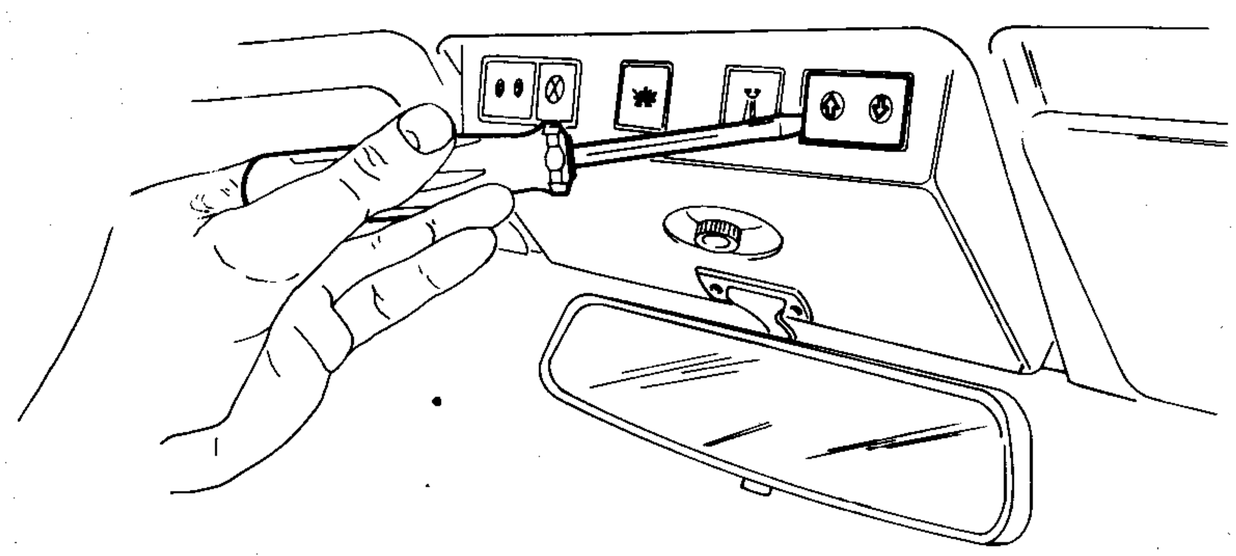

INHIBITOR SWITCH FOR REAR POWER WINDOW

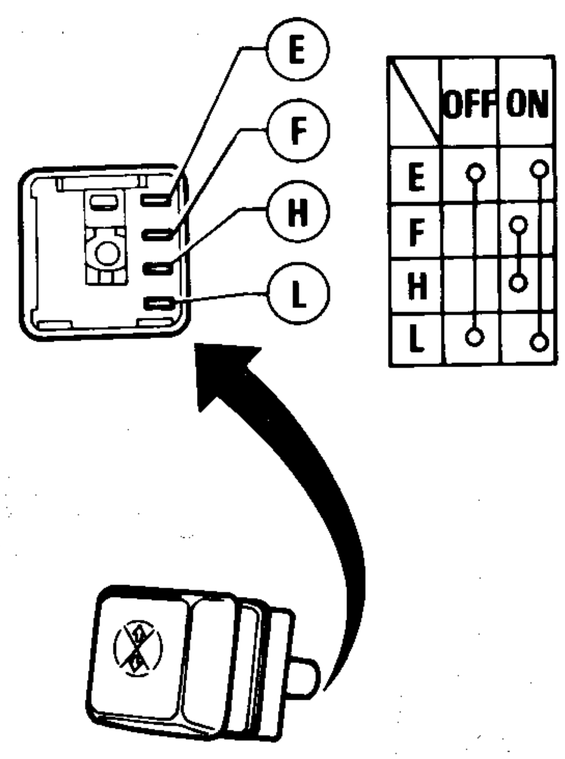

Location

It is inserted in the roof front panel (refer to: Group 66 - Internal Trimming - Roof).

Removal and installation

1. By means of a suitable tool, withdraw the switch casing from its seat, disconnect wiring and remove the switch.

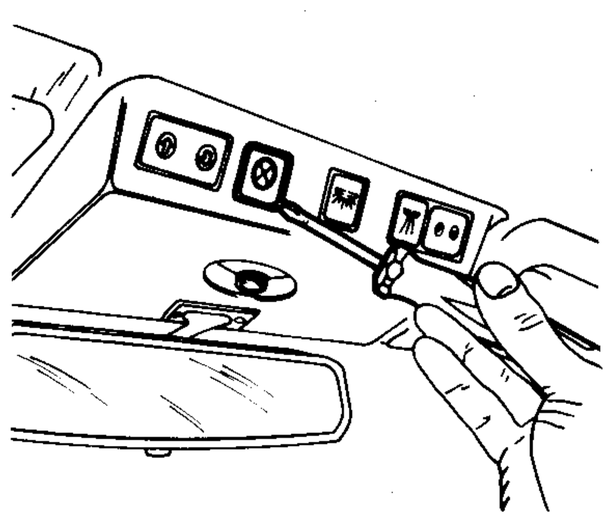

2. Install the switch by reversing the order of removal, and pressure-insert it into its seat.

Check

Check the switch functioning verifying that the electric continuity between terminals occurs in compliance with the indications given in the table.

POWER WINDOW MOTORS

Removal and installation

For these procedures, refer to: Group 55 - Front Doors; Rear Doors - Power Window Devices and Windows).

Check

By means of a warning lamp verify that, with the control switch in the contact position, the current flows correctly to motor terminals. If not so, replace the motor (refer to: Group 55 - Front Doors - Rear Doors - Power Window Devices and Windows).

DOOR-LOCK DEVICE *(wiring diagram)*

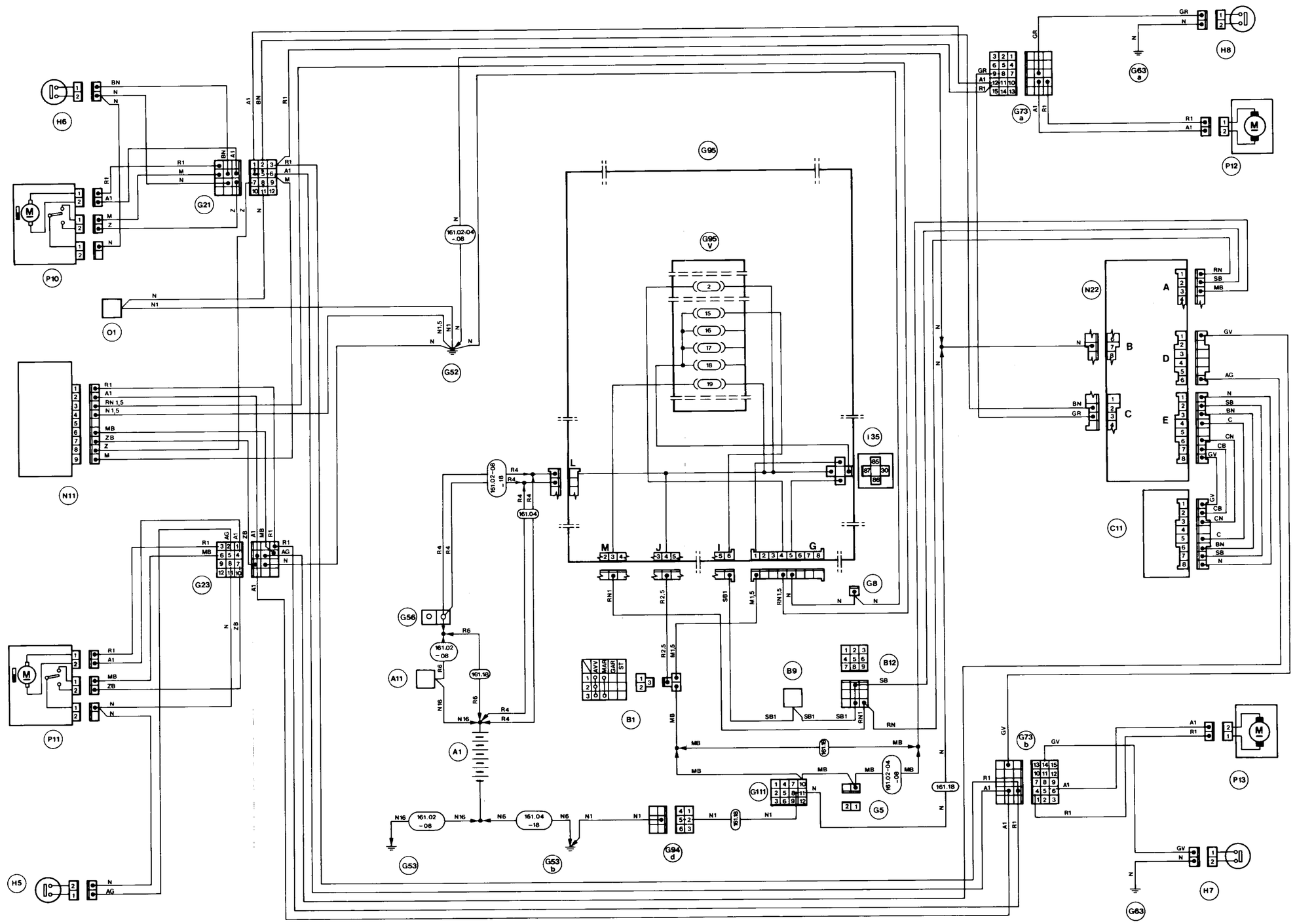

DOOR LOCK CONTROL UNIT

Location

This control unit is secured to the bracket inside the dashboard, above the central fusebox (refer to: Wiring).

Removal and installation

1. By means of a suitable tool, withdraw glove box (2) from dashboard (refer to: Group 66 - Dashboard).
2. Operating from central fusebox inside, unscrew nut (1).

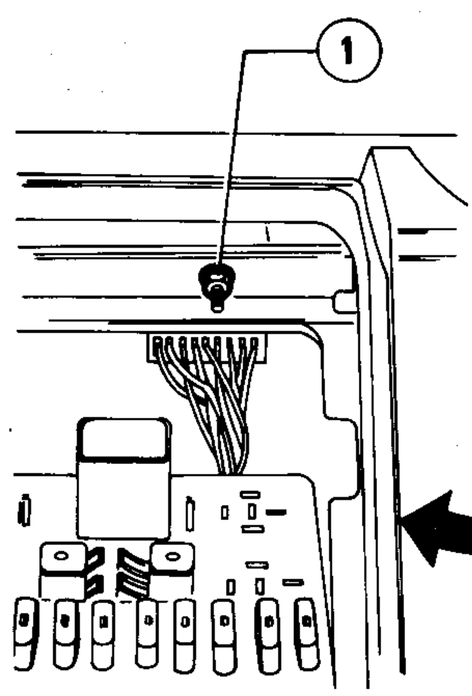

3. Withdraw the door-lock control unit through the dashboard opening, in correspondence with glovebox.

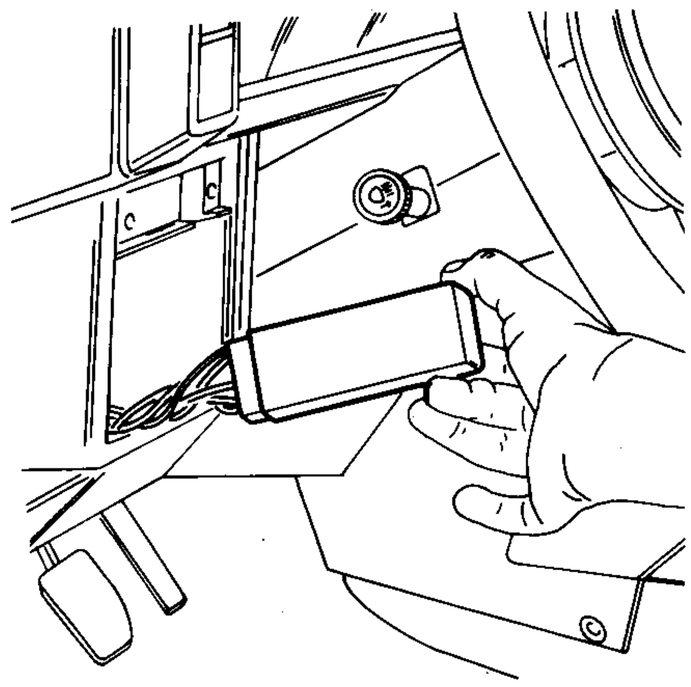

4. Disconnect wiring and remove the door lock control unit, complete with related bracket.

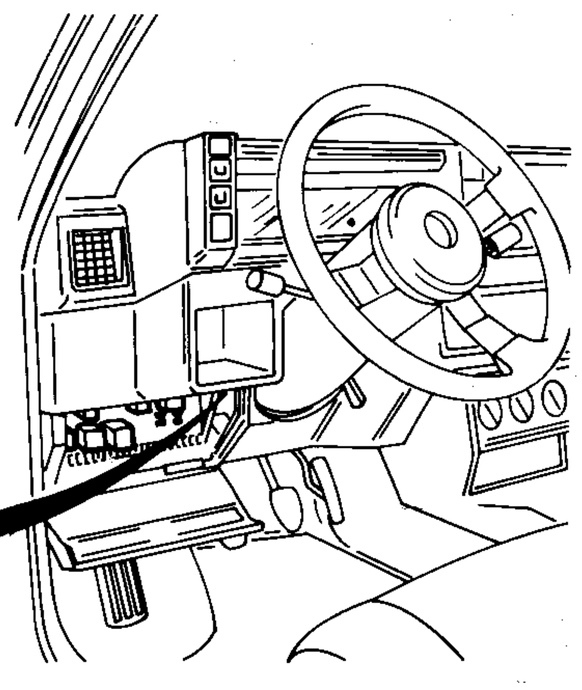

1 Nut
2 Glove box

5. Install the control unit on vehicle by reversing the order of removal.

DOOR UNLOCK SWITCH

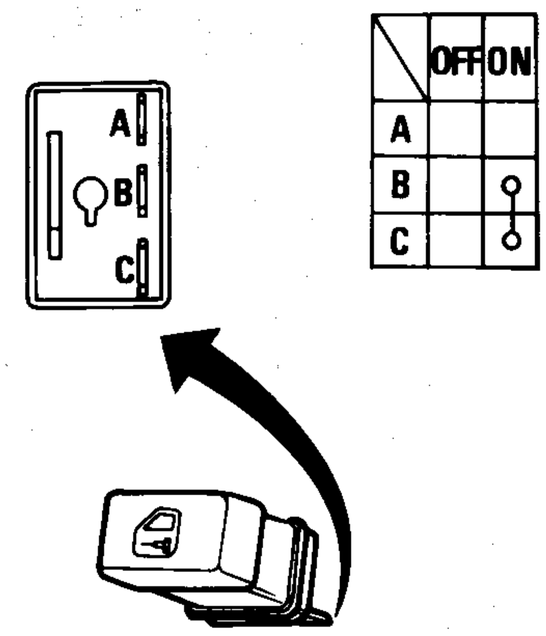

Location

It is inserted in the special seat on the front left-hand door panel (refer to: Group 55 - Front Doors).

Check

Check the switch functioning verifying that the electric continuity between terminals occurs in compliance with the indications given in the table.

CAR RADIO, CLOCK AND CIGAR LIGHTER *(wiring diagram)*

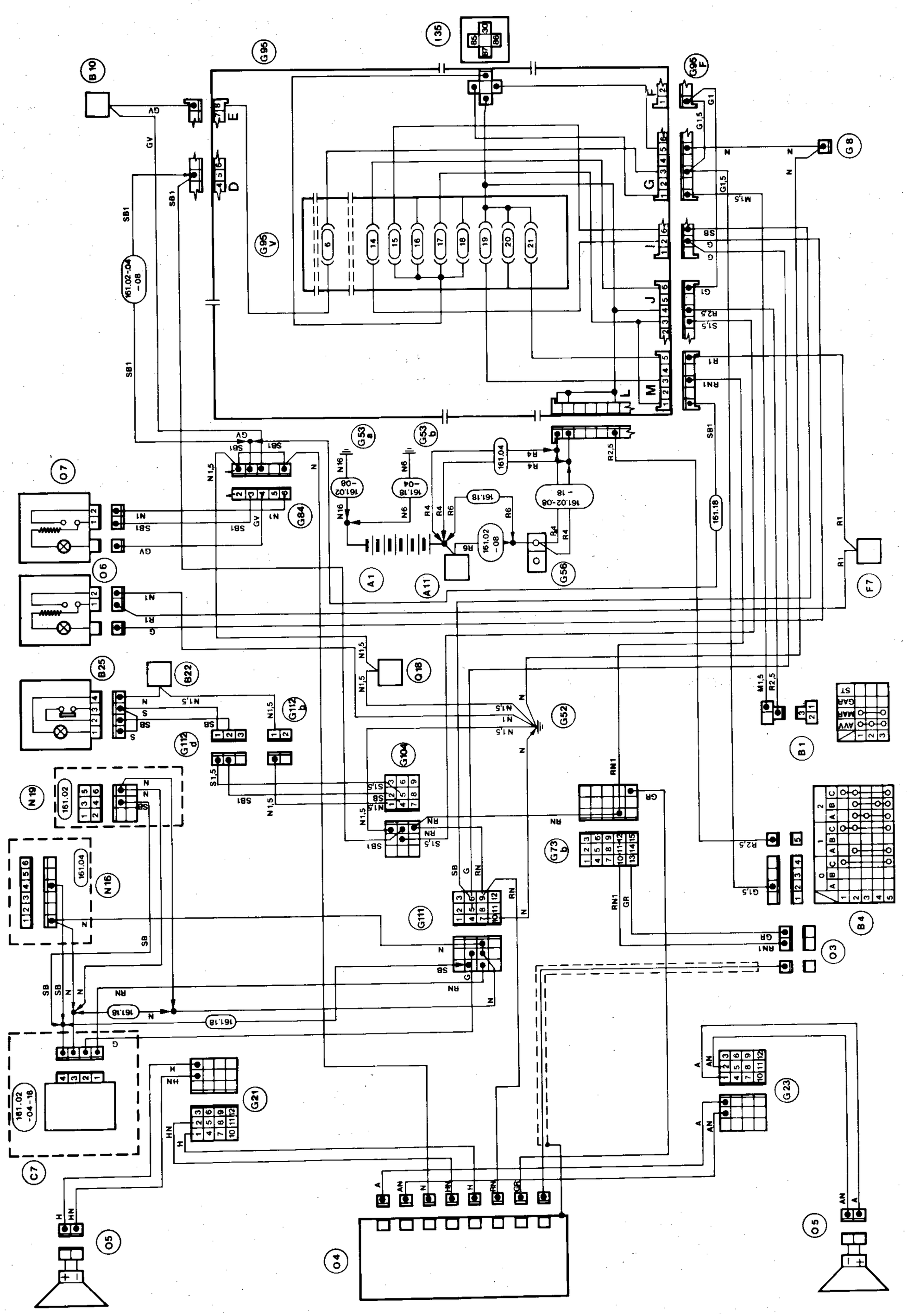

FRONT CIGAR LIGHTER

LOCATION

It is located on the dashboard, above the central air vents.

Removal and installation

1. Withdraw cigar lighter from its seat.
2. By means of a suitable tool, withdraw panel (1) from its casing on central console, and disconnect the wiring.

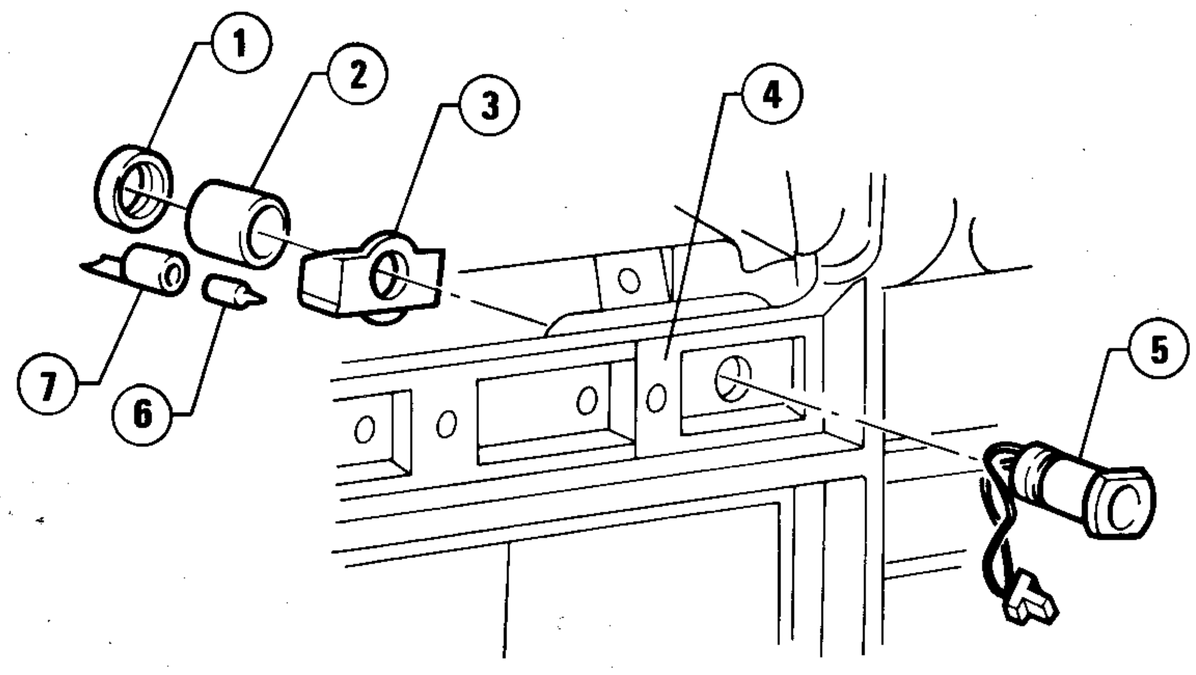

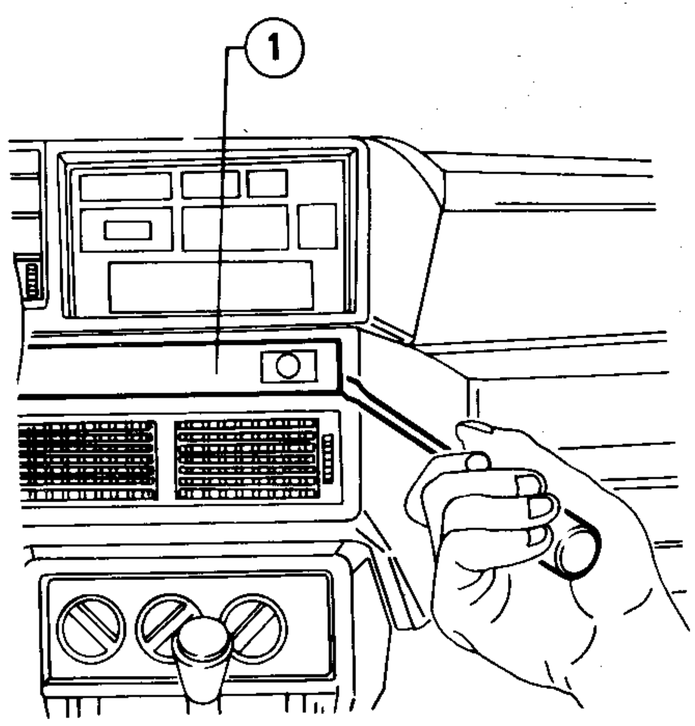

1 Panel

3. Using a suitable tool, remove the central air vent support (complete with air vents) (refer to: Group 66 - Dashboard - Removal and Installation).
4. Operating through the air vent support compartment, disconnect wiring of both cigar lighter and lighting lamp.
5. With reference to the following exploded view, unscrew ring nut (1), and remove front cigar lighter body, by disassembling it.

1 Ring nut
2 Cigar lighter covering
3 Transparent cover
4 Dashboard
5 Cigar lighter seat
6 Bulb
7 Lampholder

6. Install the cigar lighter, by reversing the order of removal.

Lamp replacement

1. Remove central console rear part (refer to: Group 66 - Consoles - Central Console).
2. Operating through the air vent support compartment, disconnect lamp wiring.
3. Lift and withdraw lampholder from its seat in the transparent cover; replace the lighting lamp.
Should the operation be difficult, disassemble the cigar lighter body (refer to: Removal and Installation) and operate on the transparent cover separated.
4. Carry out the installation by reversing the order of removal.

Check

1. Remove the air vent support (refer to: Group 66 - Dashboard - Removal and Installation).
2. Without detaching the wiring, check, by means of a warning lamp, that the current flows to the terminals of cigar lighter casing and check wiring good conditions.
3. If the lamp illuminates, and the cigar lighter is faulty, replace only the cigar lighter. If not so, replace both cigar lighter and its casing (refer to: Removal and Installation).

REAR CIGAR LIGHTER

Location

It is inserted in the rear part of central console (refer to: Group 66 - Consoles - Central Console).

Removal and installation

For removal and installation of the rear cigar lighter refer to: Group 66 - Consoles - Central Console).

Lamp replacement

1. Remove central console rear part (refer to: GR. 66 - Central Console).

2. Lower and withdraw lampholder from its seat in the transparent cover, and replace the bulb.
3. Install by reversing the order of removal.

CLOCK

(models 1.6 1.8 2.0 turbodiesel 6V iniezione).

Location

It is inserted on the instrument panel beside the ALFA ROMEO Control display.

Removal and installation

1. Remove the instrument panel from its seat on the dashboard (refer to: Group 66 - Dashboard - Removal and Installation).
2. Unscrew the two screws and remove plates (1).

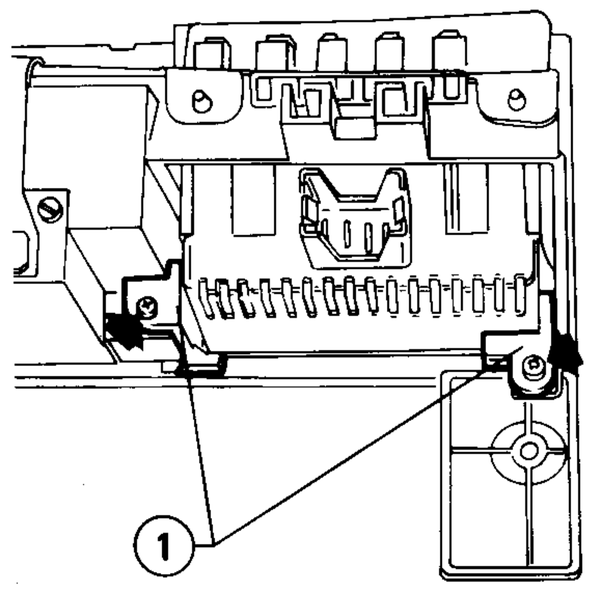

1 Securing plates

The colour of the indications displayed is green.
For an easier comprehension of the clock functioning, refer to the given indications and the related sequence.

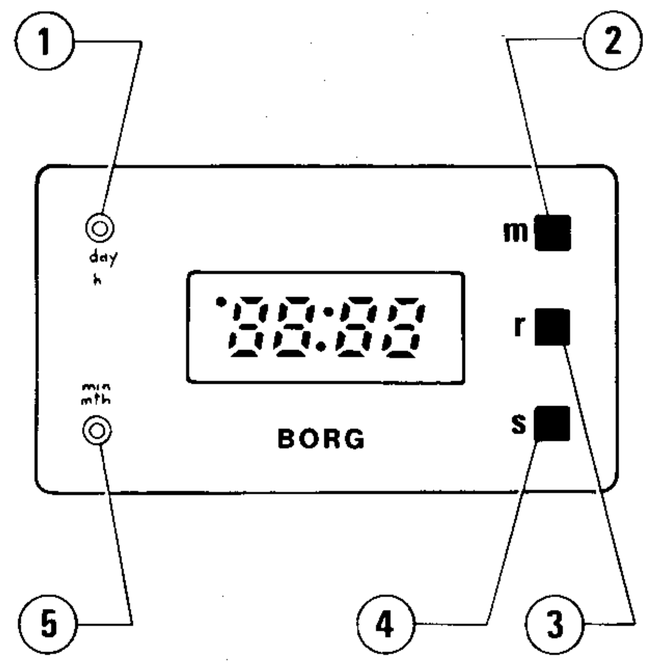

1 Hour or day setting pushbutton
2 Function display revolver pushbutton (i.e.: press this pushbutton in sequence to obtain the functions in the sequence shown below)
   a) Time-hour
   b) Date
   c) Chronometer
3 Chronometer reset
4 Chronometer start/stop
   Right time setting
5 Month or minutes setting pushbutton

TOW HOOK *(wiring diagram)*

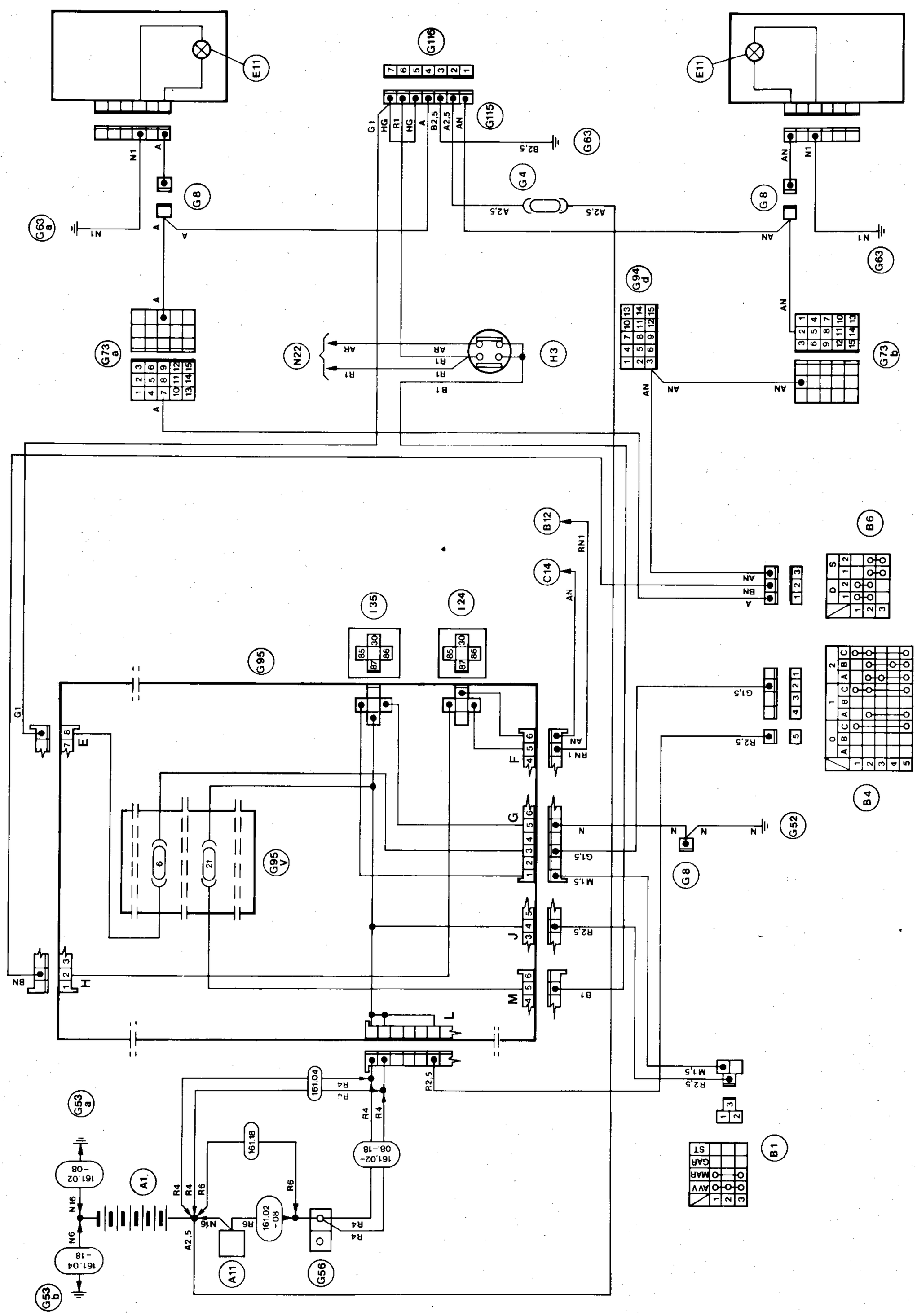

ELECTRIC CONNECTION

As regards the electric connection, make use of a seven pin connector **(12 V)** according to CUNA CN 165-30 specifications.
For correct execution of electric connection, follow the procedure below:

a. Connect the vehicle ground cable to that of trailer by means of a **7-pin** connector, making use of a cable with **2.5 mm^2 (0.0039 in^2)** section.
b. Preset the electric circuit related to the direction indicators intermittence device for an additional load of two lamps **(21 W).**
c. The holes required to feed through the cables should be protected by means of grommets. For the maximum towing weight, refer to Group 00 - Weights and Loads.

WARNING LAMP PANEL

CAUTION:
As regards the warning lamp panel wiring diagram, refer to the diagrams related to the single functions.

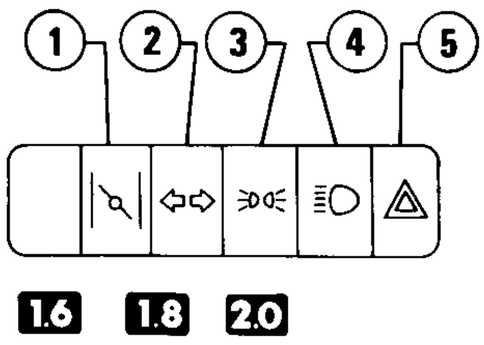

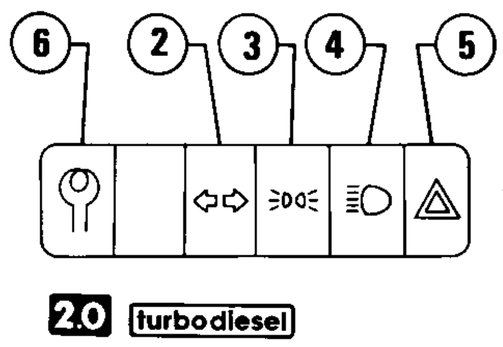

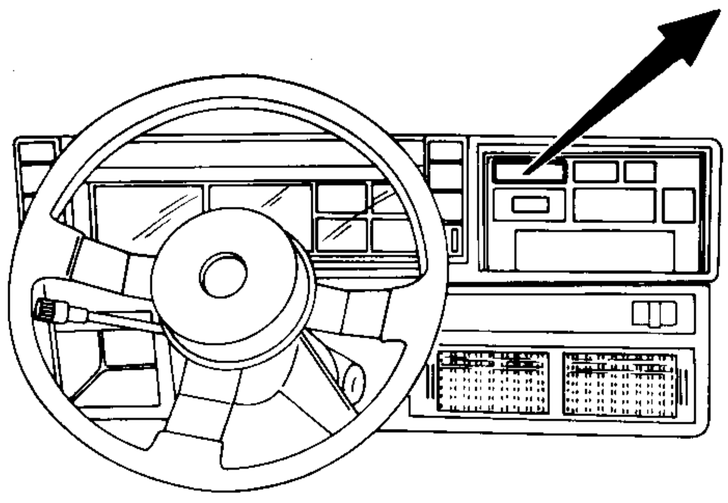

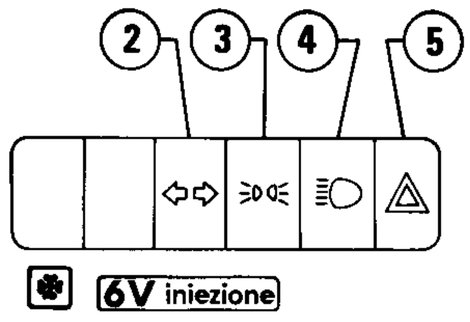

1 Starter warning lamp
2 Direction indicators warning lamp
3 Side lights warning lamp
4 Full beams warning lamp
5 Hazard lights warning lamp
6 Pre-heating glow plugs warning lamp

Location

The warning lamp panel is located on the instrument panel on cluster right-hand side.

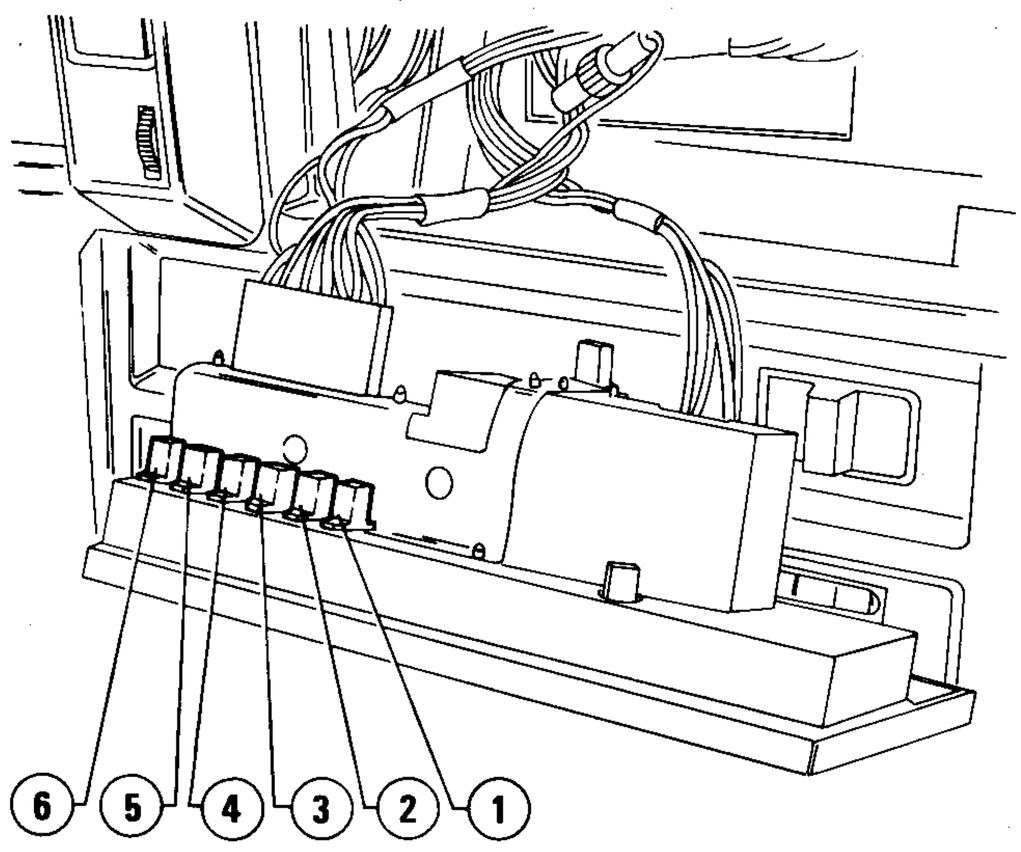

WARNING LAMPS

Replacement

1. Remove the ashtray and unscrew the two screws securing ashtray seat and instrument panel to dashboard (refer to: Group 66 - Dashboard).
2. Remove the instrument panel without disconnecting wiring.
3. Rotate and remove lampholder and replace the warning lamp.

1 Lampholder for hazard lights warning lamp
2 Lampholder for full beams warning lamp
3 Lampholder for side lights warning lamp
4 Lampholder for direction indicators warning lamp
5 Lampholder for starter on warning lamp (1.6 1.8 2.0)
6 Lampholder for pre-heating glow-plugs warning lamp (2.0 turbodiesel)

4. Carry out installation by reversing the order of removal.

WARNING LAMP CIRCUIT

Removal and installation

1. Remove instrument panel and

disconnect wiring (refer to: Group 66 - Dashboard).

2. Rotate and remove warning lampholder (2), and lighting lampholder (1).

3. Remove warning lamp circuit (3) releasing it from the plastic pins and lampholders seat.

4. Install the lampholder circuit, by inserting terminals correctly into their seats.

CAUTION:
Operate carefully to prevent damaging the printed circuit board.

5. Execute the Trip Computer initialization procedure (refer to: Group 43 - Electronic Devices - Trip Computer).

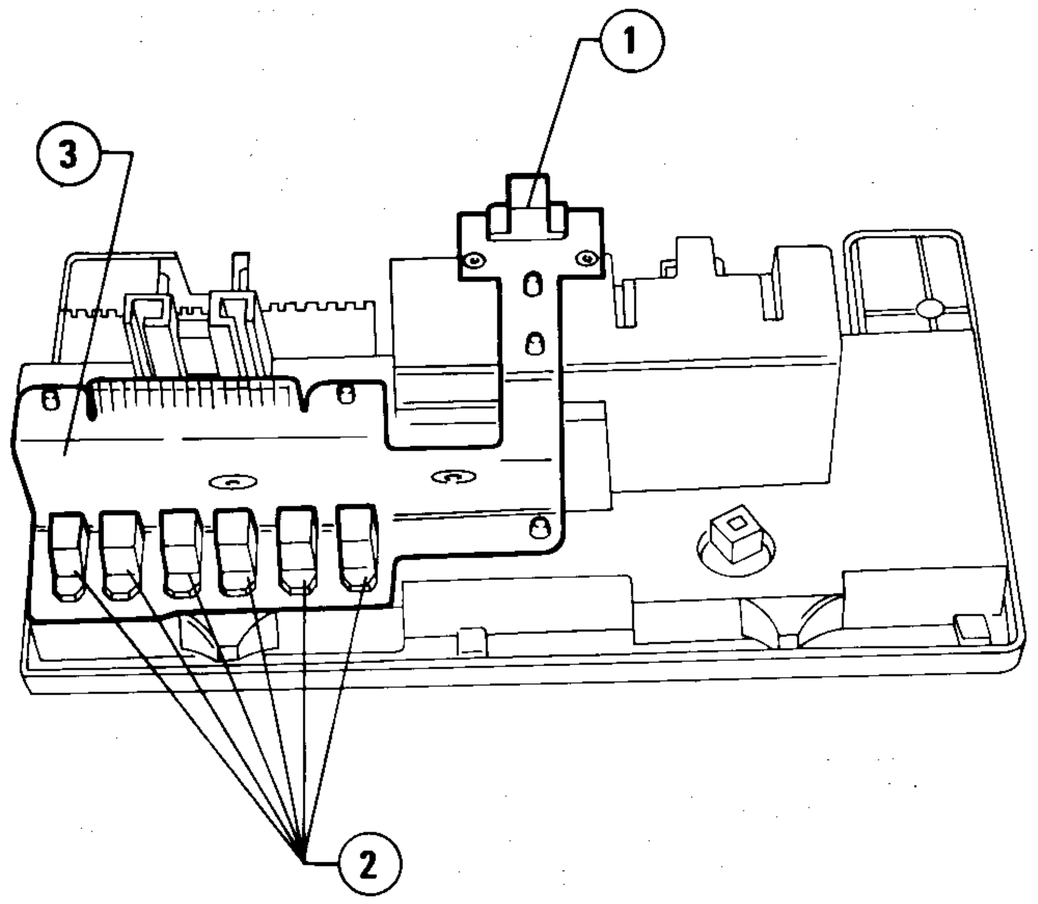

1 Lighting lampholder
2 Warning lampholder
3 Warning lamps supply circuit

ELECTRONIC DEVICES

ALFA ROMEO CONTROL
(wiring diagram)

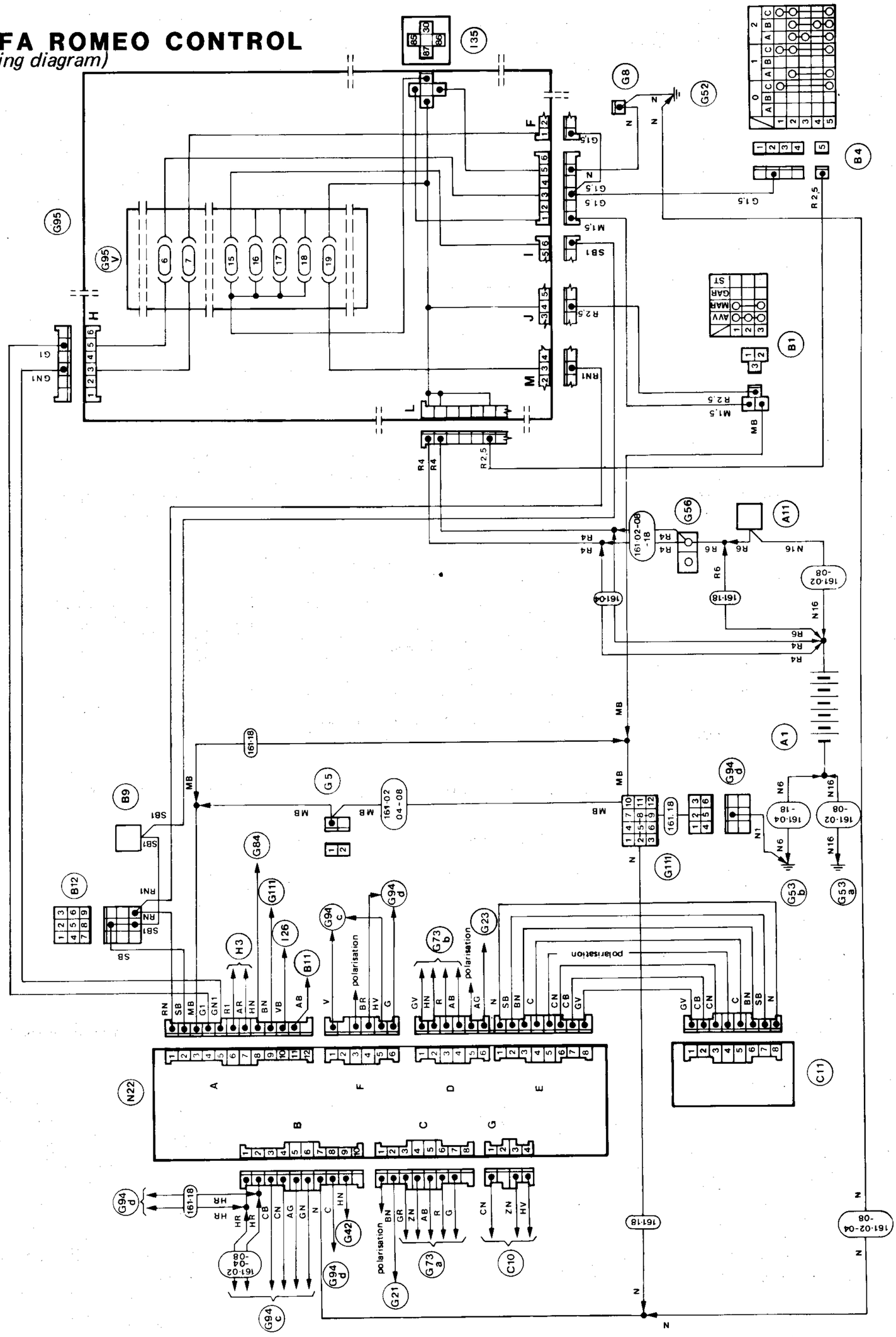

ALFA ROMEO CONTROL DISPLAY

The activated function is indicated by a red LED.
For an easier comprehension of the symbols used, refer to the ALFA ROMEO Control indications, pairing them to the related symbols.

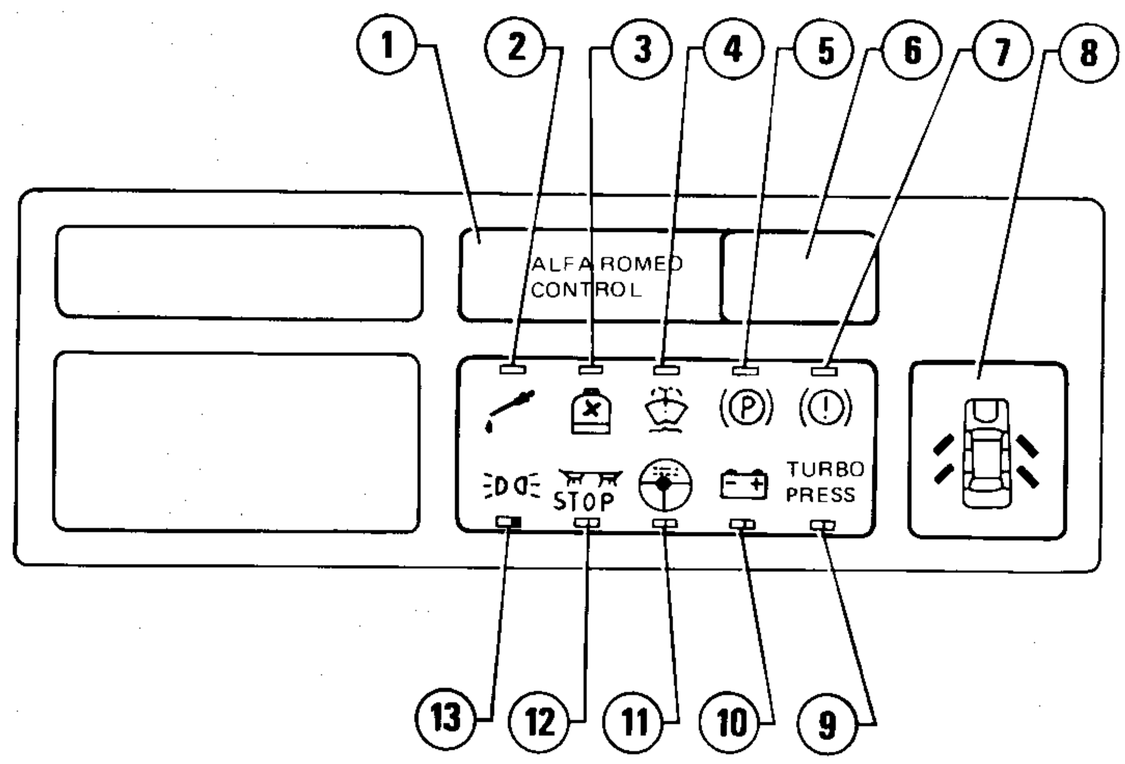

1 Red alarm warning lamp disable key
2 Engine oil level warning lamp
3 Coolant level warning lamp
4 Windscreen washer liquid level warning lamp
5 Handbrake efficiency warning lamp
6 General red alarm warning lamp
7 Brake oil level and pad wear warning lamp
8 Door lock efficiency warning lamp
9 Turbocharger max pressure warning lamp
10 Generator efficiency warning lamp
11 Cluster warning lamps efficiency warning lamp
12 Stop lights efficiency warning lamp
13 Side/rear fog lights efficiency warning lamp

Location

The ALFA ROMEO Control display is housed on the instrument panel, on cluster right-hand side.

Removal and installation

1. Remove instrument panel and disconnect wiring (refer to: Group 66 - Dashboard).
2. Remove clock or Trip Computer (refer to: Clock - Removal and Installation).
3. Rotate and remove lighting lampholder (2).
4. Unscrew the two screws shown in the figure and remove transparent cover (1),taking care to prevent damaging printed circuit board (3).
5. Remove the warning lamp circuit (refer to: Warning Lamp Panel - Warning Lamp Circuit).
6. Unscrew the three screws securing display (1) to instrument panel (2).

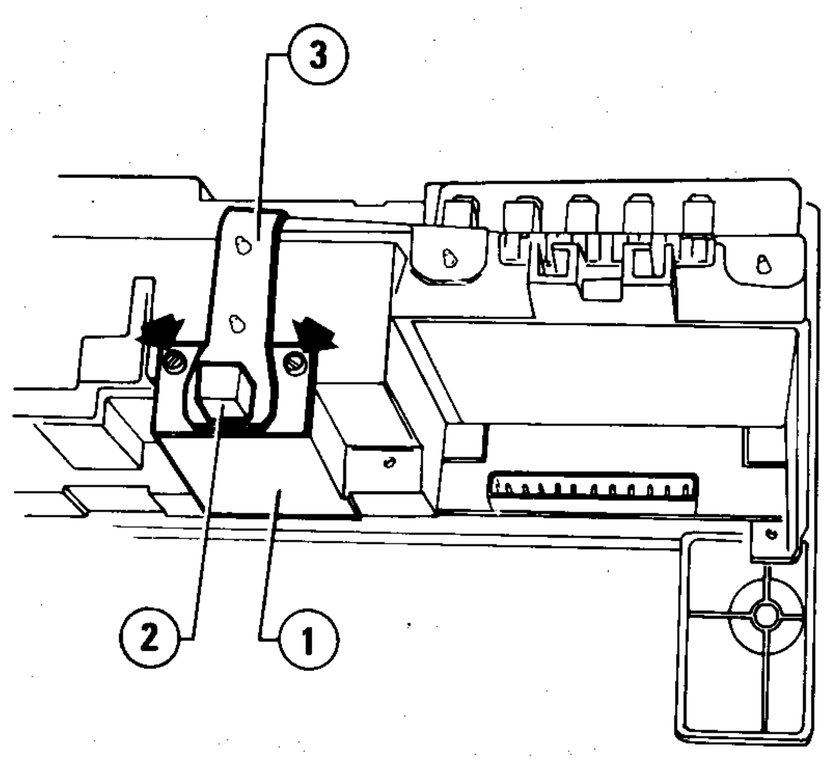

1 Transparent cover
2 Lighting lampholder
3 Warning lamps circuit

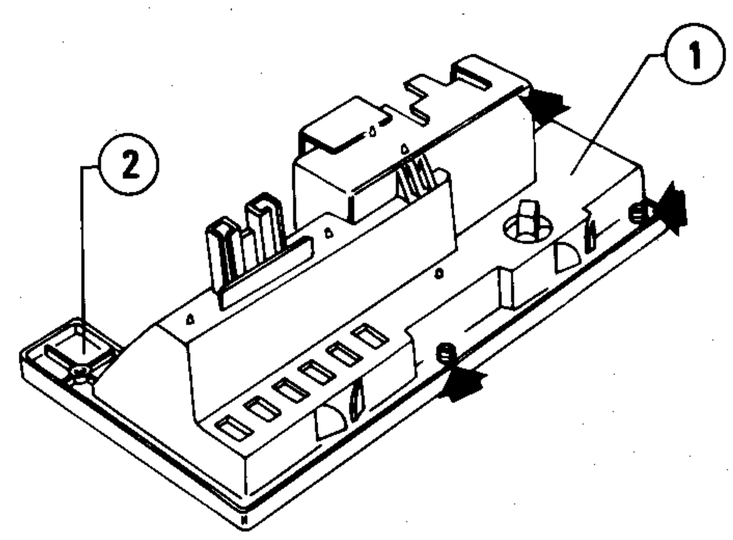

1 ALFA ROMEO Control display
2 Instrument panel

7. Separate display from panel, recovering the transparent cover.
8. Install display by reversing the order of removal.

Take care to position the transparent cover correctly.

9. Carry out the device final inspection (refer to: Group 43 - Electronic Devices - ALFA ROMEO Control).
10. Execute the Trip Computer initialization procedure (refer to: Group 43 - Electronic Devices - Trip Computer).

Replacement of alarm general warning lamp

1. Remove instrument panel without disconnecting wiring (refer to: Group 66 - Dashboard).

2. Rotate and remove lampholder (1), and replace the bulb.

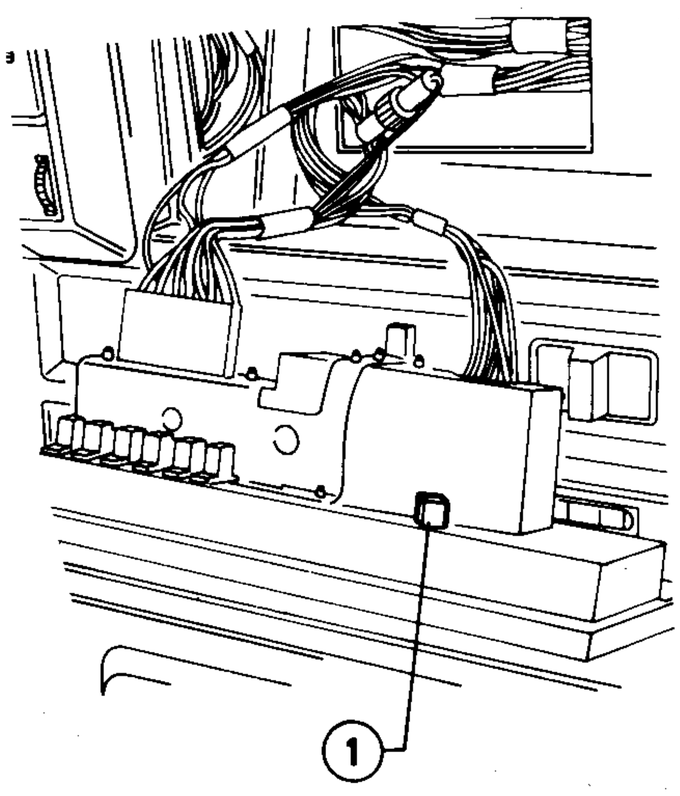

1 Alarm general warning lamp lampholder

3. Install panel by reversing the order of removal.

ALFA ROMEO CONTROL CONTROL UNIT

Location

It is housed inside the dashboard on the lid above the right-hand glove compartment.

Removal and installation

1. Unscrew the screws securing the lid and overturn it (refer to: Fuel Supply - Tachymetric Switch Device).
2. Unscrew the two nuts securing control unit (1), disconnect wiring (2), and disconnect control unit.

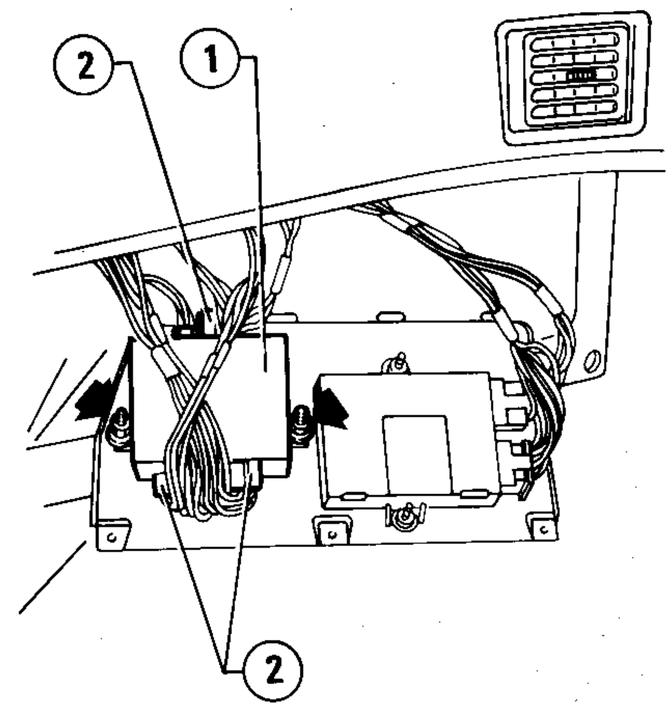

1 ALFA ROMEO Control control unit
2 Wiring

3. Carry out installation by reversing the order of removal.
4. Inspect the device (refer to: Group 43 - Electronic Devices ALFA ROMEO Control).

TRIP COMPUTER 2.0 *(wiring diagram)*

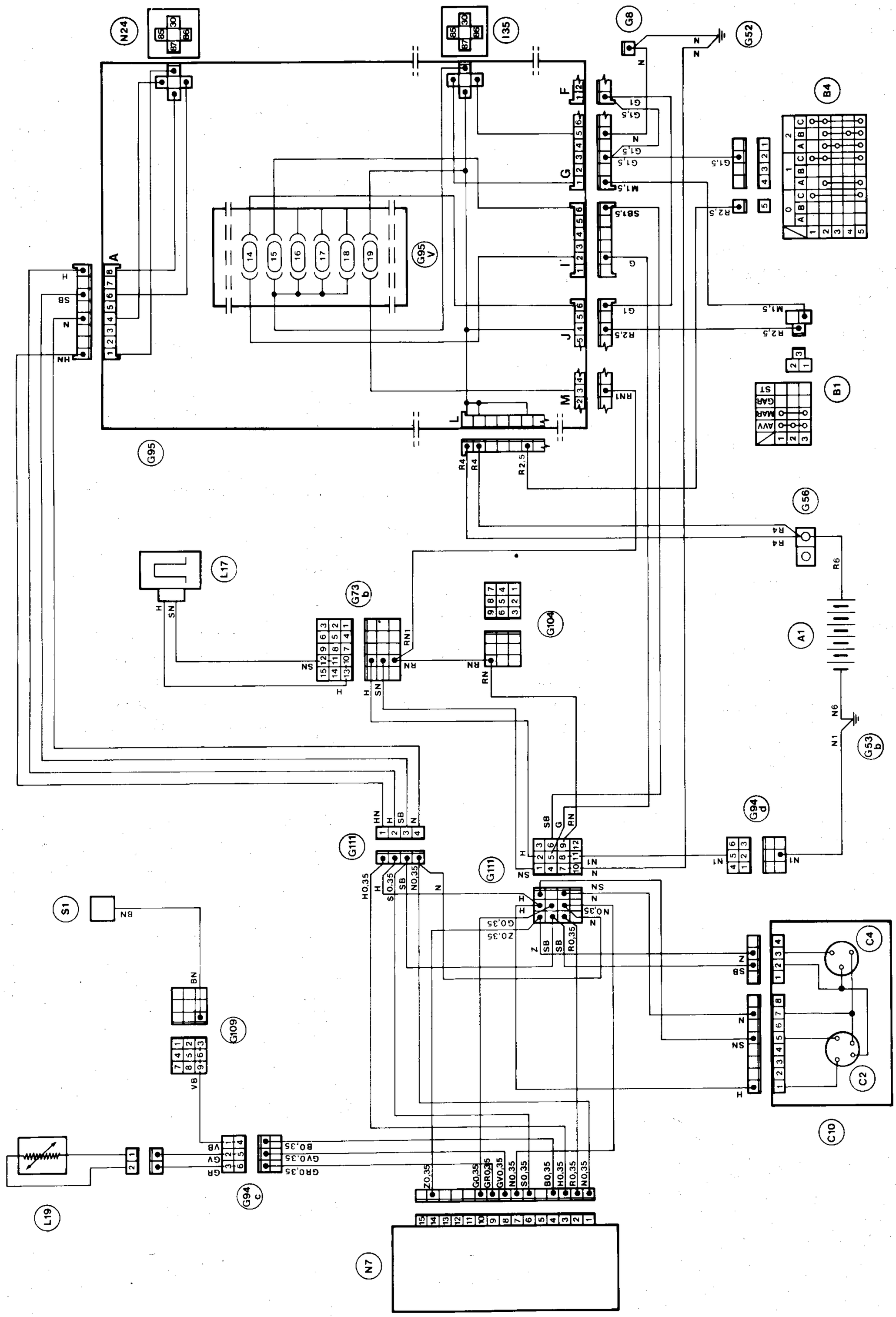

TRIP COMPUTER ⊛ 6V iniezione *(wiring diagram)*

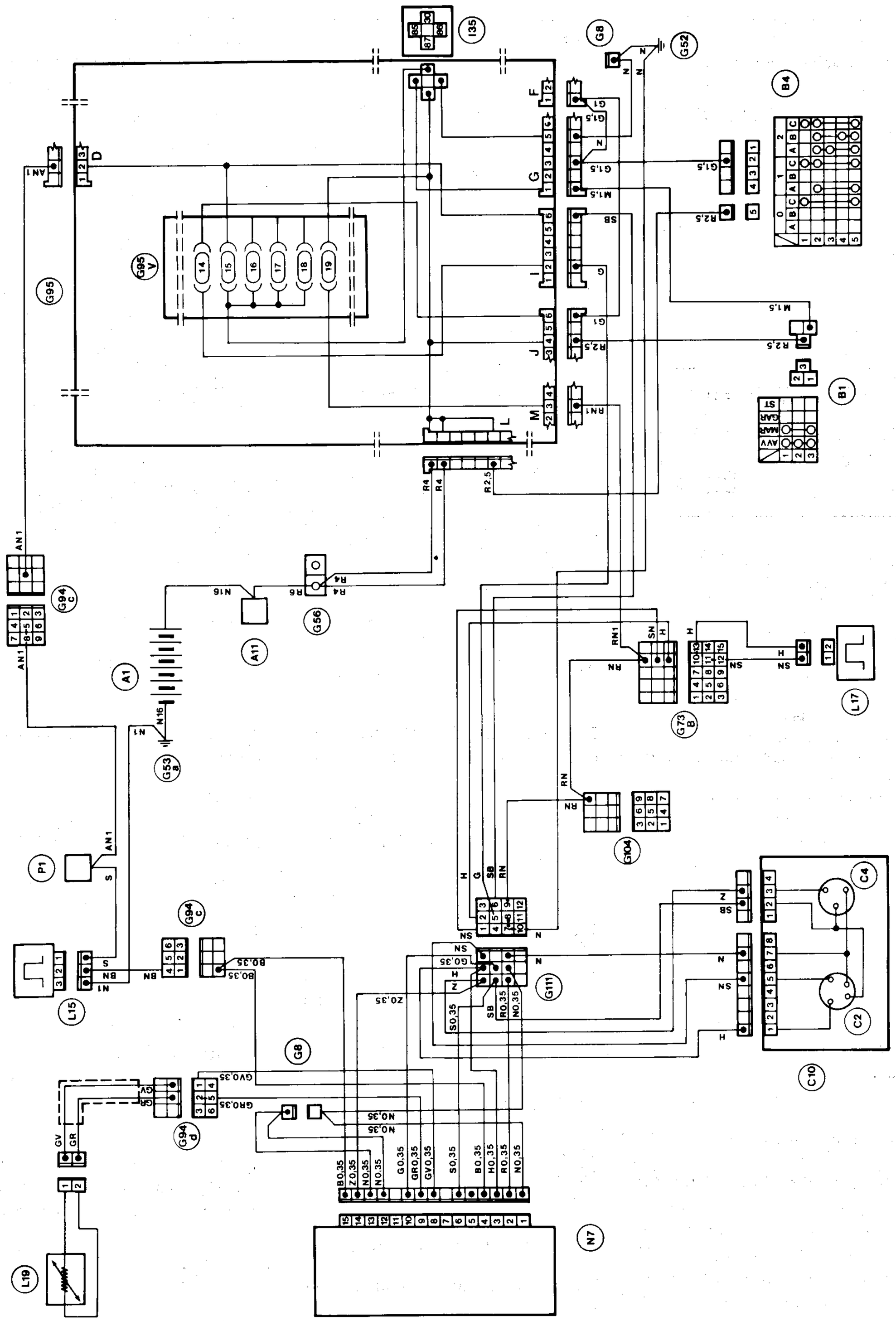

TRIP COMPUTER

CAUTION:
Should the vehicle not be used for long periods of time, it is good practice to disconnect the Trip Computer ground cable.

For an easier comprehension of the data, refer to the Trip Computer indications, and the related sequence.

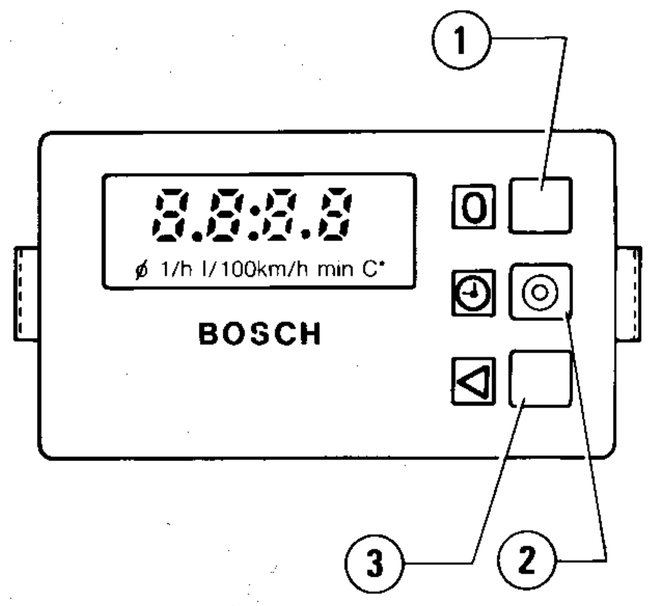

1 Function reset pushbutton -chronometer control - hours and minutes correction
2 Clock select pushbutton
3 Function select pushbutton (revolver type sequence)
a) Immediate consumption
b) Average consumption
c) Average speed
d) Endurance
e) Chronometer
f) External temperature

Location

It is housed on the instrument panel, besides the ALFA ROMEO Control display.

Removal and installation

1. Remove the Trip Computer operating as per the clock removal (refer to: Clock - Removal and Installation).
2. Install the Trip Computer by reversing the order of removal.
3. Carry out the initialization, Tests and, if necessary, Setting procedures (refer to: Group 43 - Electronic Devices - Trip Computer).

Lighting lamp replacement

1. Remove instrument panel without disconnecting wiring.

2. Remove lampholder and replace the lamp.

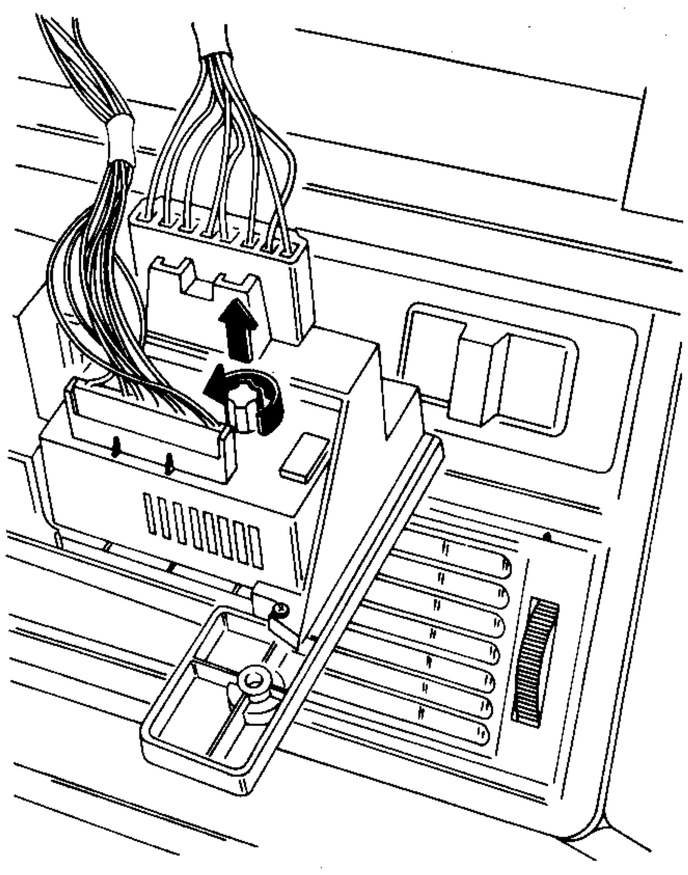

3. Install the Trip Computer by reversing the order of removal.

OUTSIDE TEMPERATURE SENSOR

Location

2.0

It is housed inside the bumper, on the support bracket mounted on windscreen/headlight washer tank.

6V iniezione

It is housed in front of front right-hand side wheel, under the headlamp.

Removal and installation

To facilitate the operation, set vehicle on a lift.

2.0

1. Remove the windscreen washer tank (refer to: Windscreen/Headlight Washer - Tank).
2. Withdraw the outside temperature sensor (1) from the seat on bracket (2).

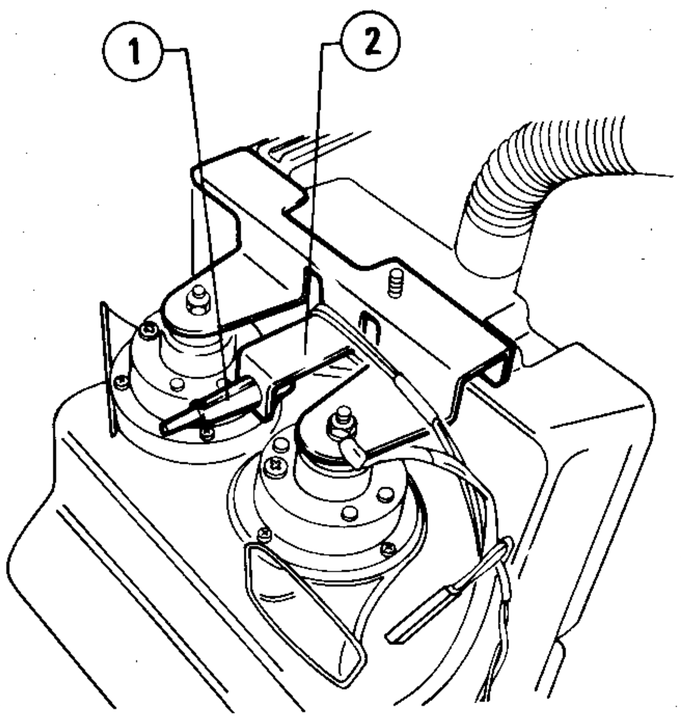

1 Outside temperature sensor
2 Bracket

3. Install sensor by reversing the order of removal.

6V iniezione

1. Withdraw sensor from body.
2. Disconnect wiring and remove sensor.

FLOW GAUGE

2.0

Location

It is housed on the related bracket on the right-hand side of engine compartment, underneath air cleaner.

Removal and installation

WARNING:
Operation is to be performed on cold engine.

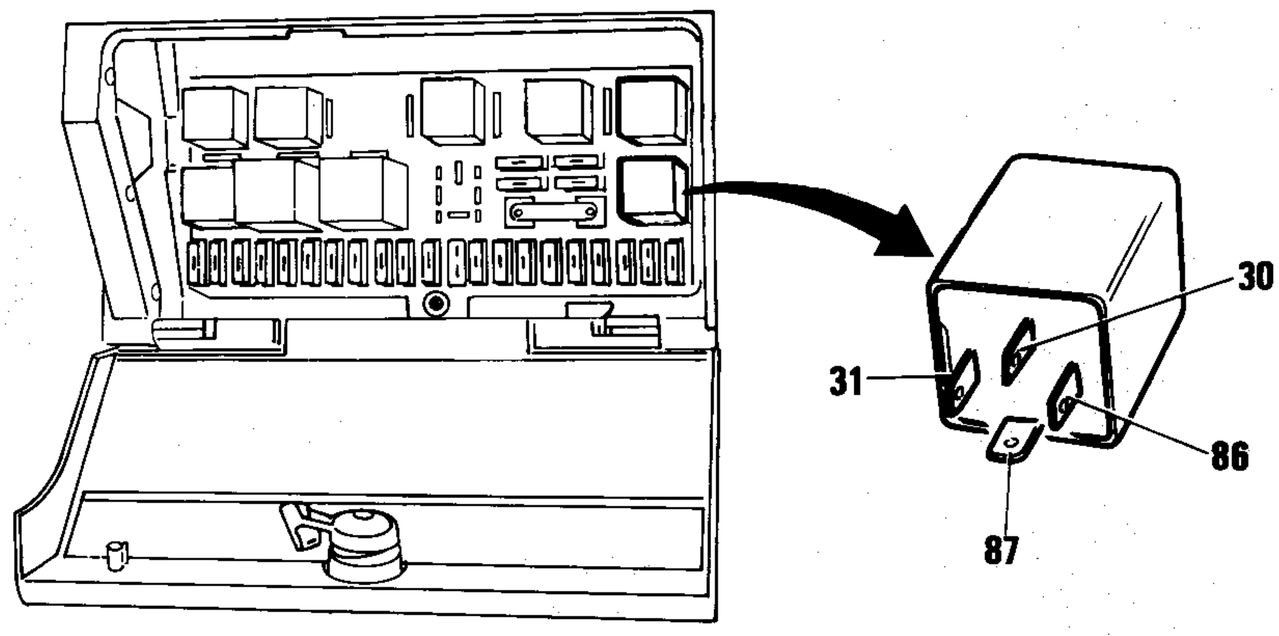

1. Disconnect the flow gauge wiring.
2. Remove the flow gauge.
a. Loosen the clamps securing hose, and disconnect fuel supply piping (2). Plug the piping.
b. Unscrew the two screws shown in the figure, and remove flow gauge (1).

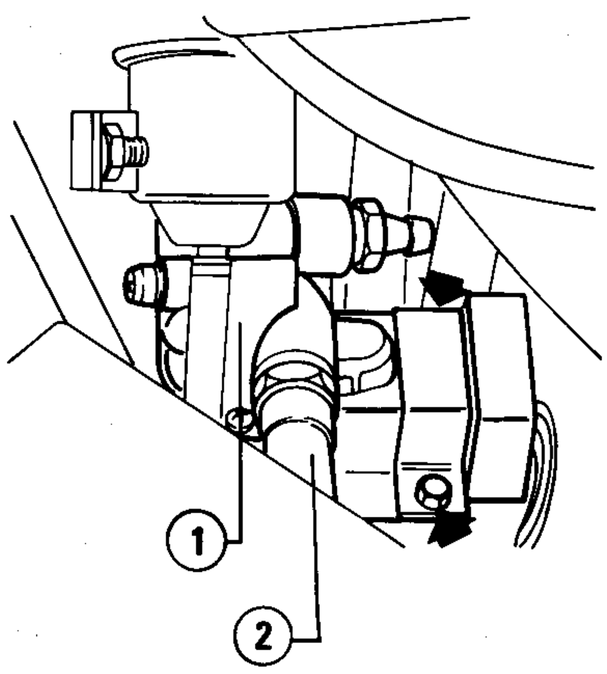

1 Flow gauge
2 Piping

3. Install the flow gauge by reversing the order of removal.

PULSE CONVERTER FOR TRIP COMPUTER

[*] [6V iniezione]

Location

It is inserted on the central fusebox in correspondence with position 16.

Removal and installation

1. Withdraw the pulse converter from its seat; if required, use a suitable tool.
2. Refit the converter into its seat.

Technical features

Nominal voltage	12 V
Operating voltage	9 to 16 V

Pin out:
Pin 30: Trip signal input
Pin 31: Ground
Pin 86: +
Pin 87: Trip Signal output

AIR TEMPERATURE SENSOR

Location

The air temperature sensor is inserted inside a container secured with a bracket, on the left-hand side of bumper near the bracket which secures bumper to body.

Removal and installation

1. Place the vehicle on a lift.
2. Detach connector (7) of air temperature sensor.
3. Unscrew self-threading screws (6) and remove protective container (3) along with bracket (4).
4. Remove sensor (1) from container (3).

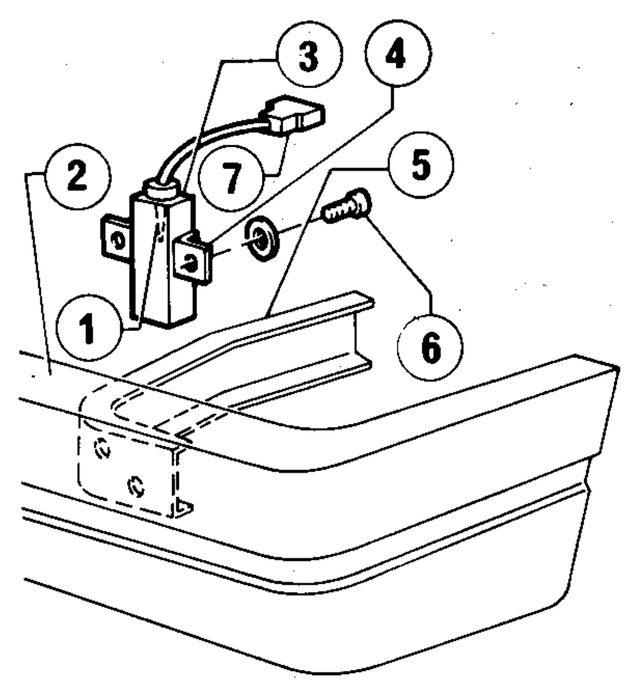

1 Air temperature sensor
2 Bumper
3 Protective container
4 Bracket supporting protective container
5 Bracket securing bumper to body
6 Screws securing bracket
7 Connector

PERFORMANCE GAUGE 1.6 1.8 *(wiring diagram)*

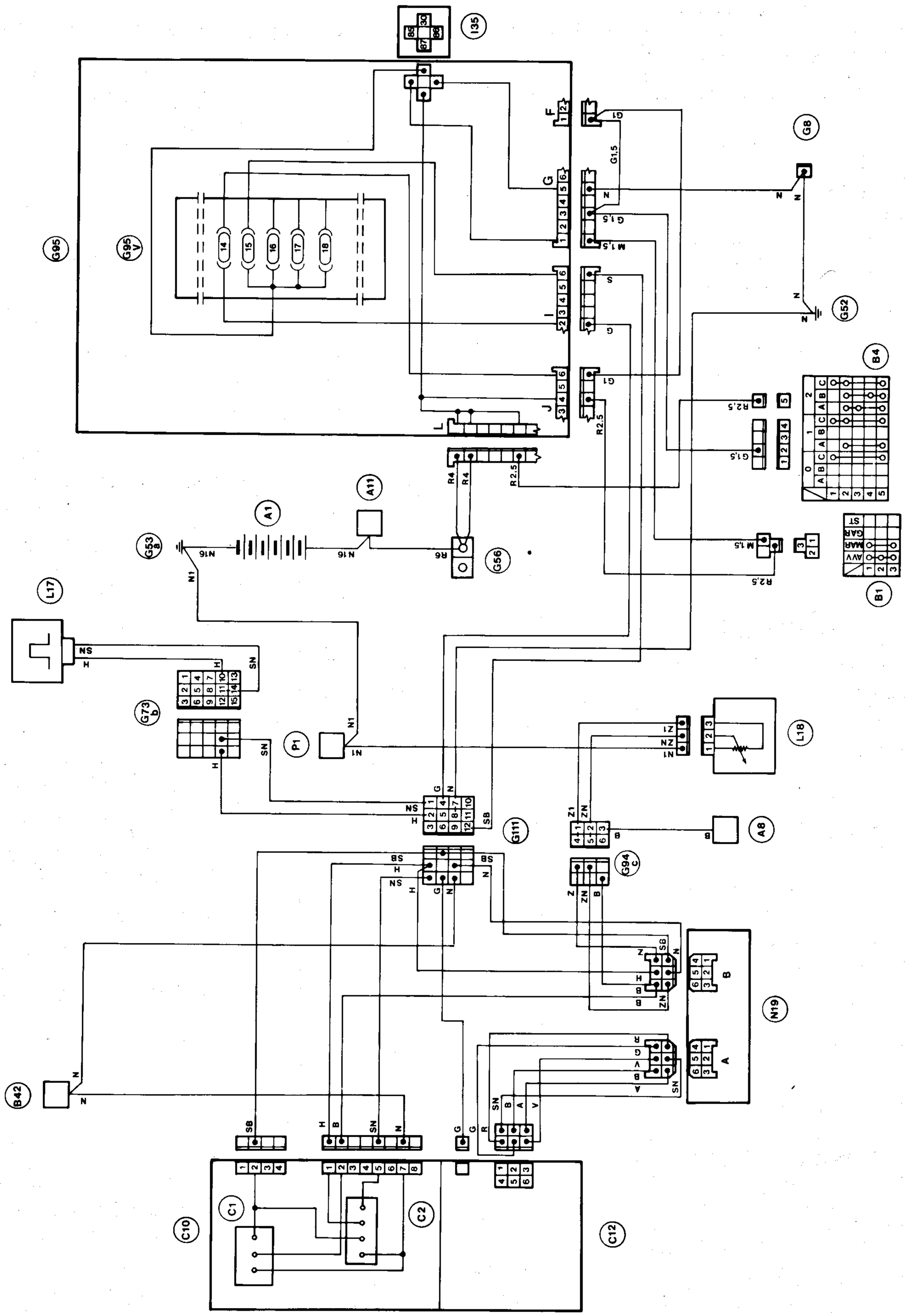

DISPLAY

Location

It is housed on cluster (refer to: Group 43 - Cluster - Removal and Installation).

Removal and installation

To replace the performance gauge display, refer to: Group 43 - Cluster - Disassembly and Reassembly.

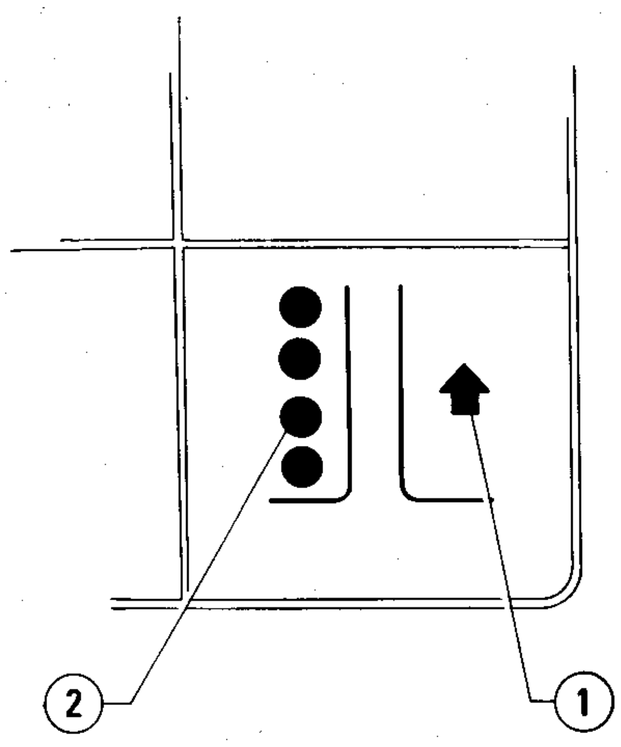

1 Gear shift arrow
2 Immediate consumption LED

PERFORMANCE GAUGE CONTROL UNIT

Location

It is housed inside the dashboard, on the lid above the right-hand side glove box.

Removal and installation

1. Unscrew the screws securing the lid and overturn it (refer to: Fuel Supply - Tachymetric Switch Device).

2. Unscrew the two nuts securing control unit (1) to lid, disconnect wiring (2) and remove the control unit.

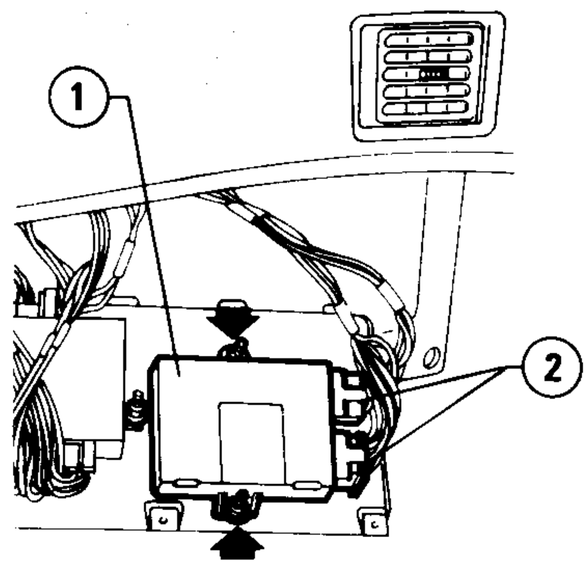

1 Performance gauge control unit
2 Wiring

3. Carry out installation by reversing the order of removal.

ENGINE COMPARTMENT WIRING 1.6 1.8 2.0

WIRING

(xx) Components common to all models

(yy) Components not present in all models

Components	Models		
	Alfa 75		
	1.6	1.8	2.0
L 15	–	–	•
L 18	•	•	–
L 19	–	–	•

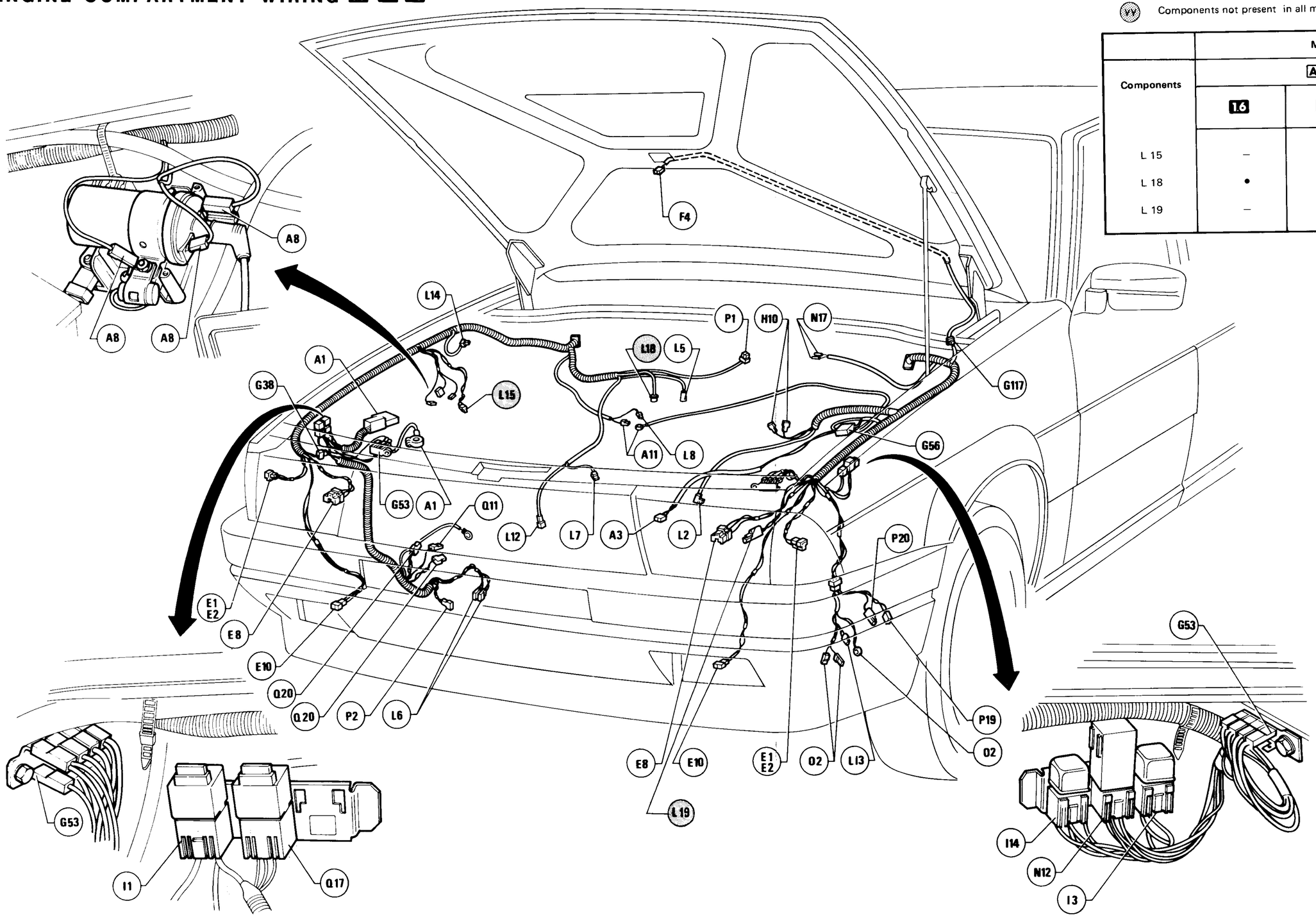

ENGINE COMPARTMENT WIRING 2.0 turbodiesel

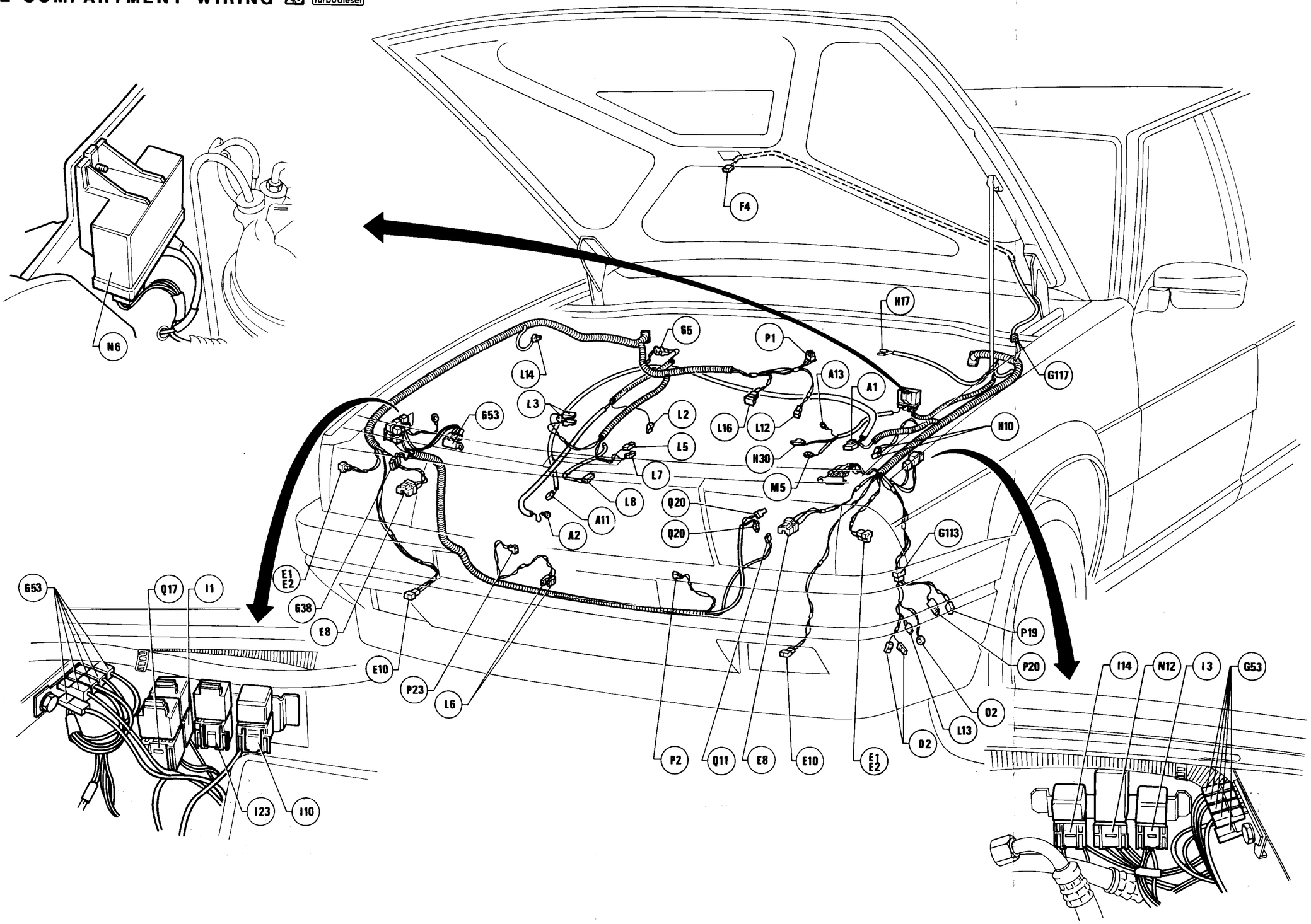

ENGINE COMPARTMENT WIRING ⊞ 6V iniezione

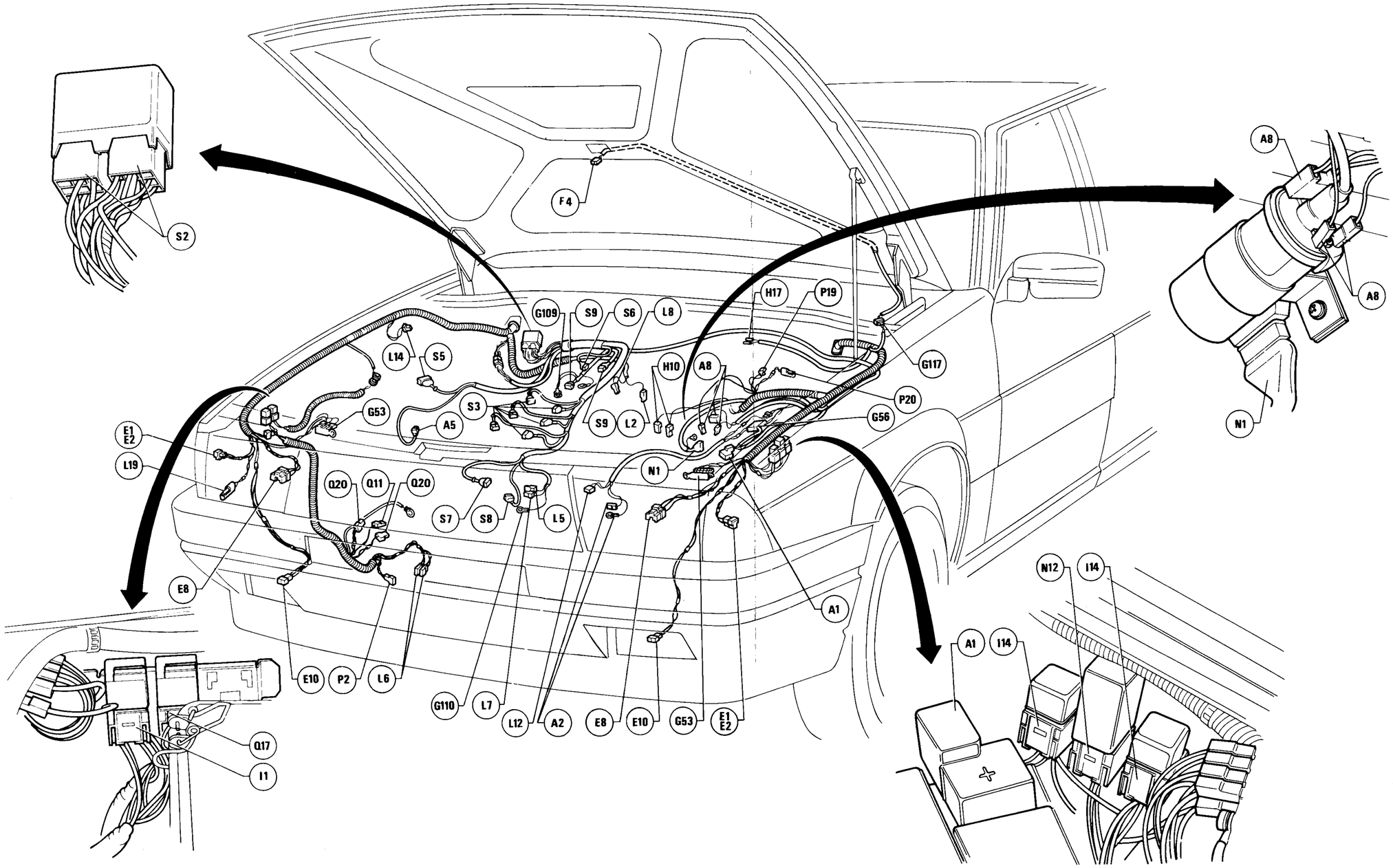

PASSENGER AND REAR COMPARTMENT WIRING
(All models)

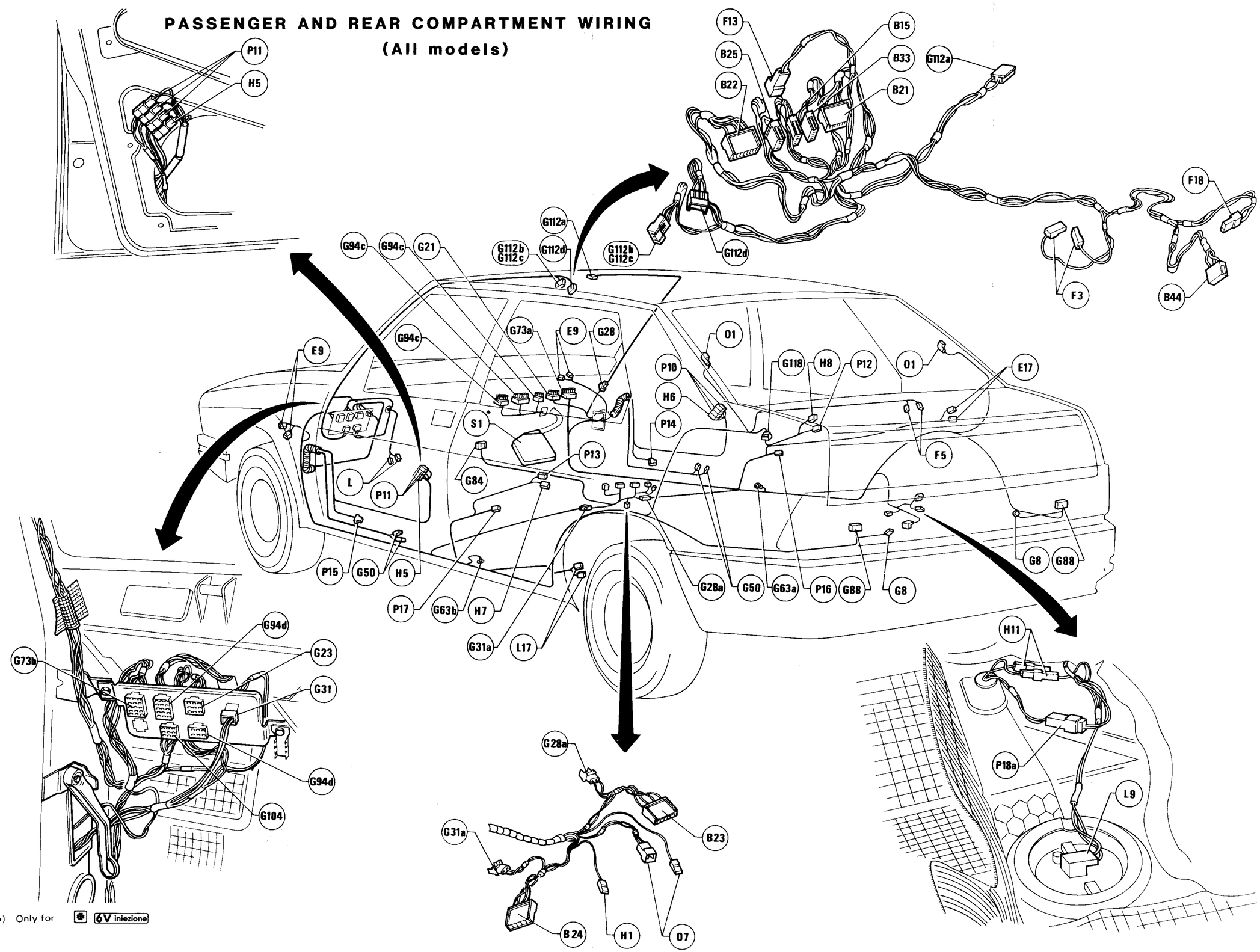

(•) Only for ⊛ 6V iniezione

DASHBOARD WIRING - PASSENGER COMPARTMENT SIDE (All models)

(xx) Components common to all models

(yy) Components not present in all models

Components	Models				
	Alfa 75				
	1.6	1.8	2.0	2.0 turbodiesel	6V iniezione
C 7	•	•	–	•	•
C 10 c	•	•	–	–	–
C 10 e	–	–	–	•	–
C 12	•	•	–	–	–
H 13	•	•	•	–	–
N 7	–	–	•	–	–

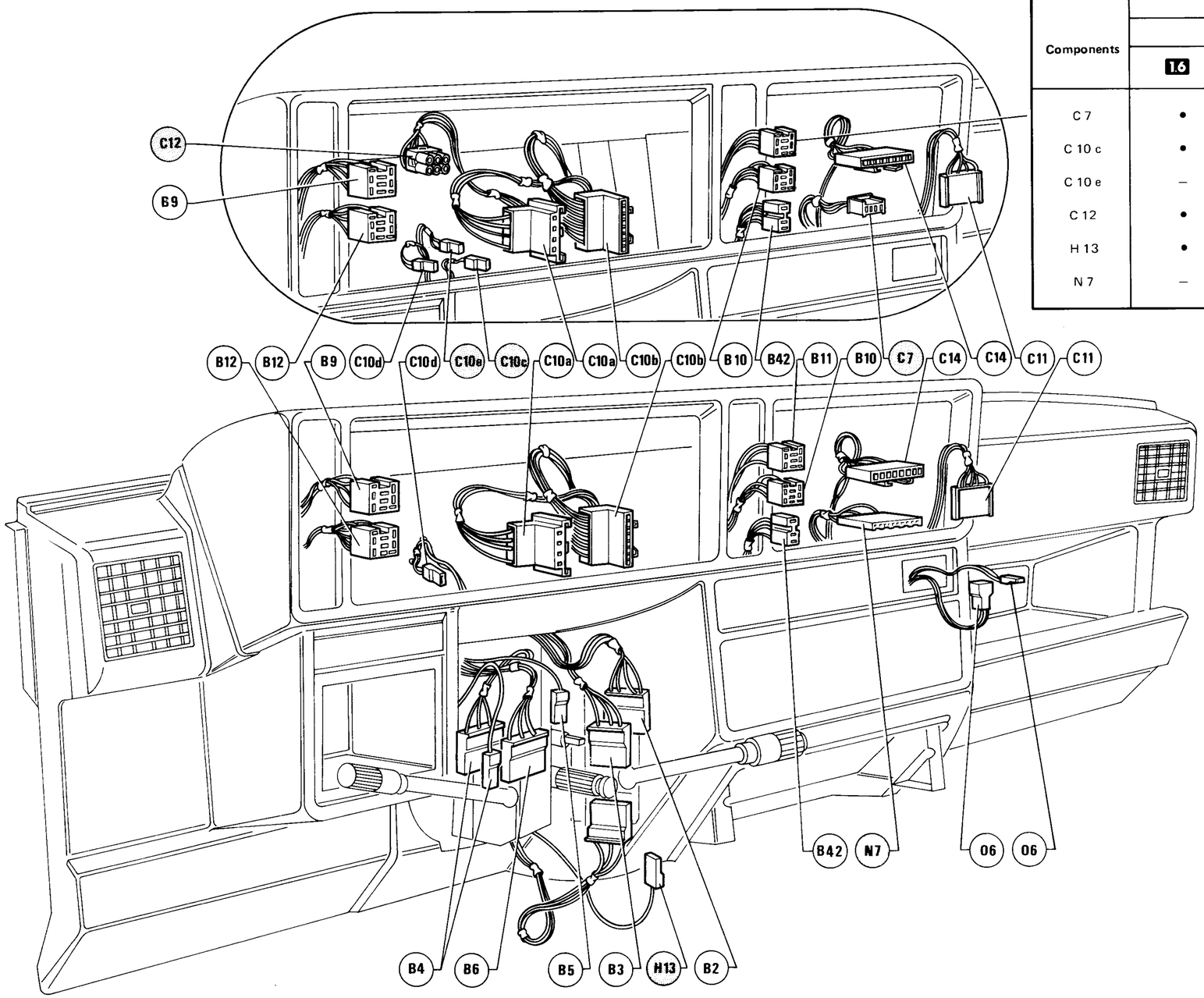

DASHBOARD WIRING - ENGINE COMPARTMENT SIDE (All models)

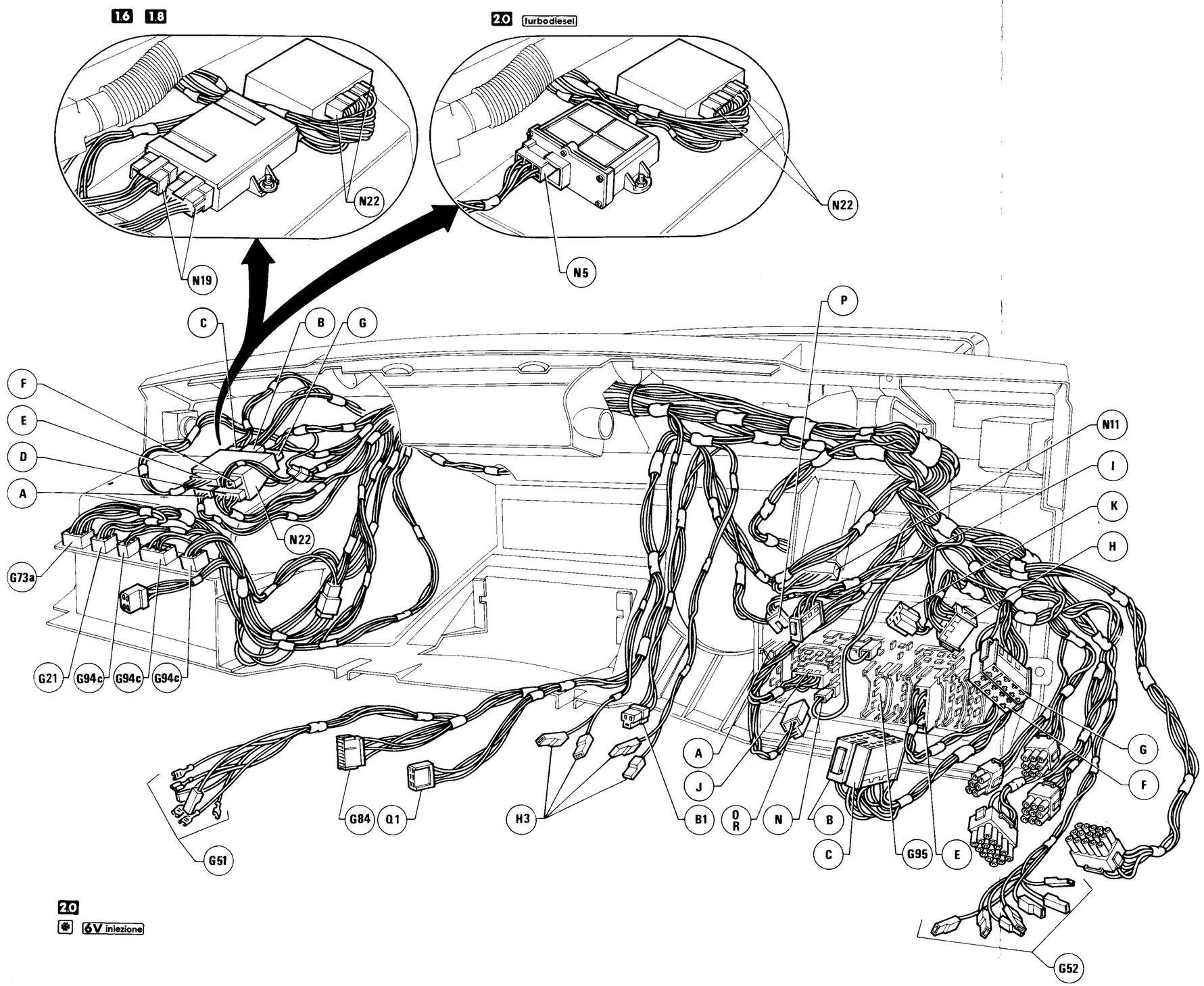

FUSEBOX PIN-OUT

For connector pin - out location, refer to the connectors shown in the fusebox rear view and to the related tables.

Pin - out location for connectors G, F, E, D, C, B, H and K

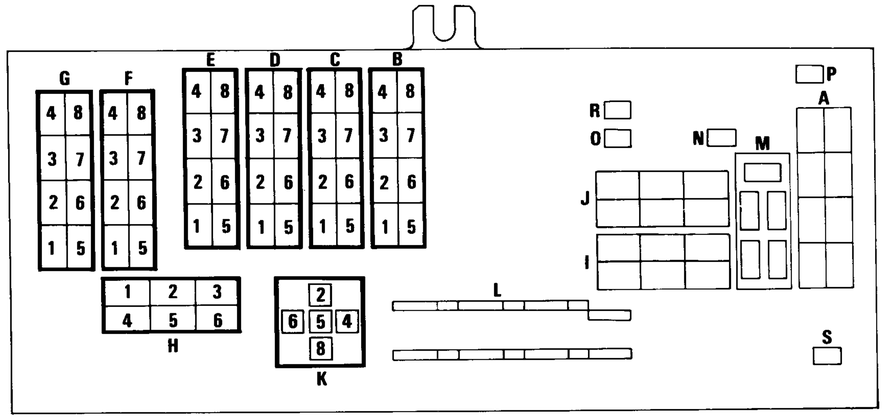

Fusebox - Rear view

Connector G: red colour

Pin	Colour	Service
1	M	Ignition switch
	VN	Connector for injection power supply wiring (1)
2	N	Intermediate connector (SWE - AUS versions excepted)
3	G	Fusebox: connector F, pin 1
	G	Combination switch
4	RN	Door lock control unit
5	N	Intermediate connector (CH SWE and AUS versions excepted)
	N	Fusebox: connector D, pin 1
6	Z	Fog lights switch
7	–	Free
8	CN	Heated rear window switch

(1) 6V iniezione versions excepted

Connector F: brown colour

Pin	Colour	Service
1	G	Fusebox: connector J, pin 6
	G	Fusebox: connector G, pin 3
2	–	Free
3	AB	Fusebox: connector A, pin 7
4	H	Combination switch
5	RN	Hazard lights switch
6	AN	Warning lamps panel
7	–	Free
8	–	Free

Connector E: yellow colour

Pin	Colour	Service
1	N	Heated rear window
2	–	Free
3	AB	Left fog light
	AB	Right fog light
4	RN	Rear power windows switch
5	–	Free
6	–	Free
7	N	Fusebox, connector D, pin 1
8	GV	Fog lights switch

Connector C: blue colour

Pin	Colour	Service
1	Z	Combination switch: windscreen wiper
2	RN	Combination switch: windscreen wiper
3	BN	Headlights wiper timer
	BN	Combination switch: headlights wash/wipe
4	–	Free
5	HN	Windscreen wiper motor
6	–	Free
7	–	Free
8	–	Free

Connector H: black colour

Pin	Colour	Service
1	RN	Headlights wiper timer
2	BN	Combination switch: direction indicators
	BN	Hazard lights switch
3	GN	ALFA ROMEO Control: connector A, pin 5
4	–	Free
5	G	ALFA ROMEO Control: connector A, pin 4
6	SB	Fuel electric pump (1)

(1) SN colour for 6V iniezione version, valid for air - conditioned vehicles

Connector D: green colour

Pin	Colour	Service
1	N	Fusebox: connector G, pin 5
	N	Fusebox: connector E, pin 7
2	AN	Windscreen wiper motor
	SN	Combination switch: windscreen wiper
3	H	Front right combination lamp: full beam light
	H	Rear fog lights switch
4	HG	Number plate lights
5	SB	Rear power window inhibitor switch
6	V	Front right combination lamp: low beam light
	V	Intermediate connector (CH version)
7	HN	Front left combination lamp: low beam light
8	VN	Front left combination lamp: full beam light
	VN	Warning lamps panel

Connector B

Pin	Colour	Service
		Not connected

Connector K

Pin	Colour	Service
2	VB	ALFA ROMEO Control: connector A, pin 10
4	HN	Passenger compartment roof lamp switch
	HN	Fuse light (1)
5	–	Free
6	–	Free
8	–	Free

(1) For 2.0 2.0 turbodiesel 6V iniezione versions

Pin - out location for connectors L, I, J, O, R, N, M, A, P and S

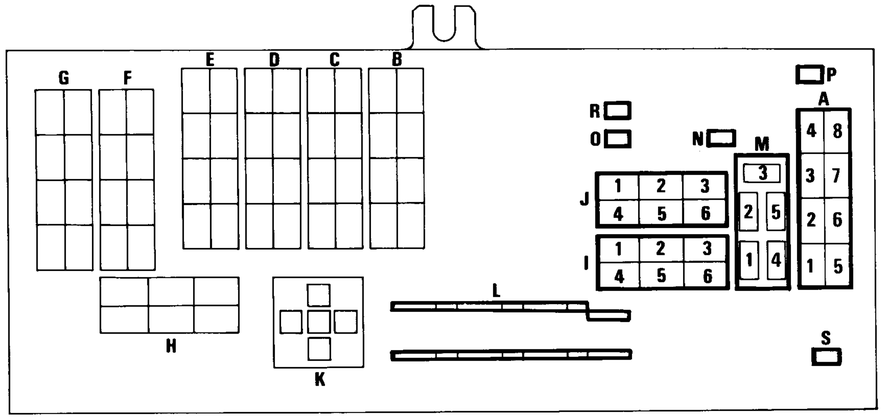

Fusebox - Rear view

Connector L

Pin	Colour	Service
–	R	Combination switch power supply
–	R	Fusebox: connector O (1)
–	R	Terminal board for battery power supply cables
–	R	Terminal board for battery power supply cables

(1) For 2.0 turbodiesel version

Connector J: yellow colour

Pin	Colour	Service
1	–	Free
2	S	Brake pad wear sensor
3	S	Rear power window inhibitor switch
4	R	Ignition switch
5	–	Free
6	G	Fusebox: connector F, pin 1

Connector I: red colour

Pin	Colour	Service
1	–	Free
2	G	Cigar lighter
	G	Lamp dimmer rheostat
3	V	Combination switch
	HN	Combination switch
4	–	Free
5	–	Free
6	SB	Cluster
	SB	Heated rear window switch

Connector O

Pin	Colour	Service
–	SB	Fusebox: connector M, pin 4 (2)
–	R	Fusebox: connector L (1)

(1) For 2.0 turbodiesel version

(2) For air conditioned vehicles

Connector R

Pin	Colour	Service
–	S	Brake fluid level relay (1) (2)

(1) For 2.0 turbodiesel version

(2) For 2.0 carburettors, 6V iniezione versions

Connector M

Pin	Colour	Service
1	SB	Rear cigar lighter (2)
2	R	Front power window switches
3	RN	Hazard lights switch
	RN	Engine compartment lamp
4	SB	Fusebox: connector O (1)
5	R	Fuse light
	B	Stop light switch

(1) Not connected on 2.0 turbodiesel version

(2) Connected on 6V iniezione version only

Connector P (1)

Pin	Colour	Service
–	R	Relay set (Injection system)

(1) Connected on 6V iniezione version only

Connector N (1)

Pin	Colour	Service
–	N	Glow plug pre-heating control unit

(1) Connected on 2.0 turbodiesel version only

Connector A: grey colour (1)

Pin	Colour	Service
1	HN	TRIP COMPUTER (3) (4)
2	H	Rear fog lights switch (2) (3)
3	AB	Fusebox: connector A, pin 7 (2) (3)
4	N	TRIP COMPUTER ground (3) (4)
5	V	Intermediate connector (2) (3)
6	SB	Cluster (3) (4)
7	AB	Fusebox: connector F, pin 3 (2) (3)
	AB	Fusebox: connector A, pin 3 (2) (3)
8	H	TRIP COMPUTER: speedometer pulse generator (3) (4)

(1) Not connected on 2.0 turbodiesel version

(2) For 1.8 2.0 versions (for CH only)

(3) For 6V iniezione version (for CH only)

(4) For 6V iniezione version (CH excepted)

Connector S

Pin	Colour	Service

FUNCTIONAL DIAGRAM

1.6 **1.8** **2.0**

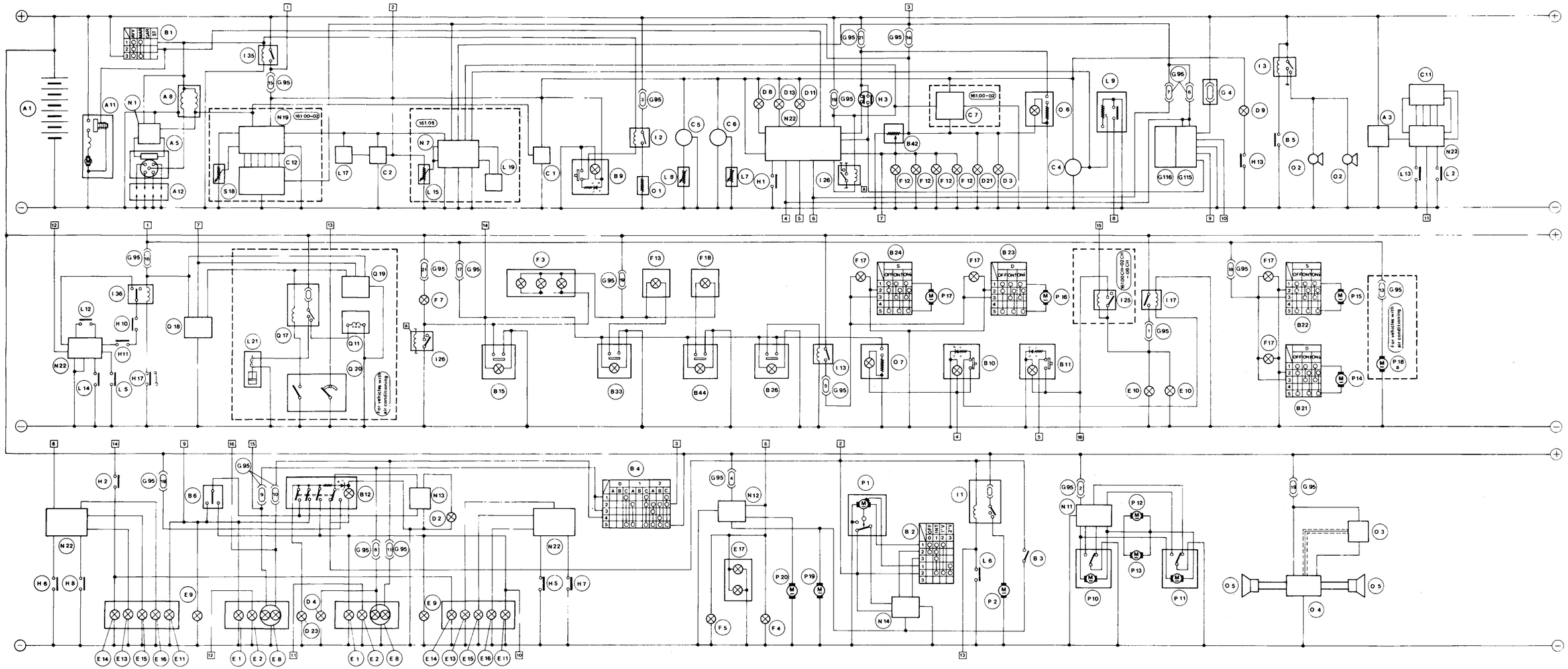

2.0 turbodiesel

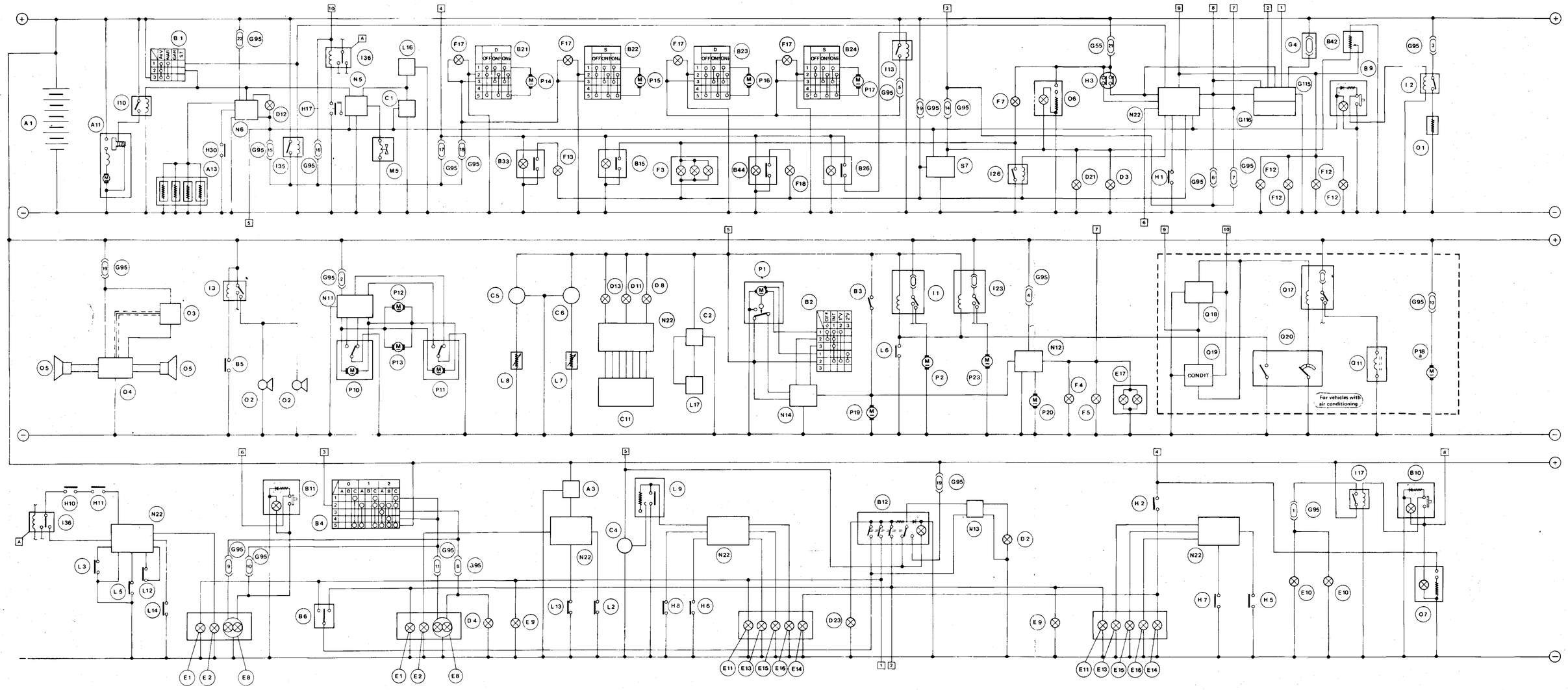

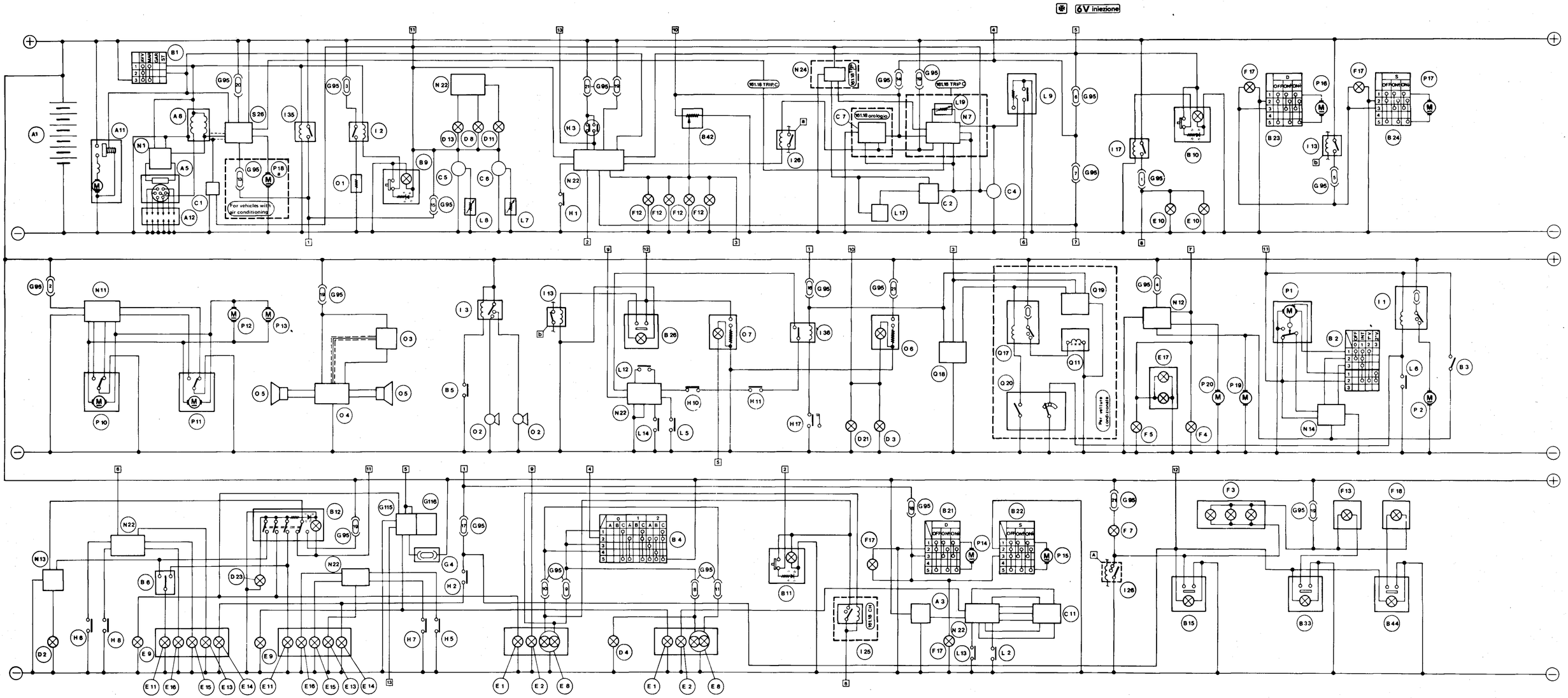
6V iniezione
For vehicles with air conditioning
Per vetture lusso
OFF
ON

KEY TO WIRING DIAGRAM

A: STARTING - CHARGING

A1 Battery
A2 Alternator
A3 Alternator with integral electronic voltage regulator
A4 Voltage regulator
A5 Ignition distributor
A6 Impulse generator
A7 Rotor
A8 Ignition coil
A9 Coil resistor
A10 2-way connector for coil
A11 Starter motor
A12 Spark plugs
A13 Pre-heating glow plugs
A14 Alternator cable terminal board

B: MANUAL ELECTRIC CONTROLS

B1 Ignition switch
B2 Windscreen wiper control
B3 Windscreen and/or headlamp washer pump control
B4 Control for side lights, flashing, low/full beam headlamps
B5 Horn control switch
B6 Direction indicators control
B7 Low beam flashing control switch
B8 Full beam flashing control switch
B9 Heated rear window control switch
B10 Fog lamp control switch
B11 Rear fog lamp control switch
B12 Road hazard lights control switch
B13 Passenger compartment front roof lamp control switch
B14 Passenger compartment rear roof lamp control switch
B15 Passenger compartment roof lamp control switch
B16 Cluster lighting dimmer rheostat
B17 Gearbox oil level warning lamp switch
B18 Door lock control switch on front right door
B19 Door lock control switch on front left door
B20 Interior door locking switch
B21 Front right power window control switch
B22 Front left power window control switch
B23 Rear right power window control switch
B24 Rear left power window control switch
B25 Rear power window inhibitor switch
B26 Rear power window and rear cigar lighter inhibitor switch
B27 Front seat height control switch
B28 Front left backrest control switch
B29 Front right backrest control switch
B30 Door mirror control switch
B31 Antenna control switch
B32 Windscreen washer pump control
B33 Front spot switch
B34 Rear left spot switch
B35 Rear right spot switch
B36 Door mirror double control switch
B37 Side light control switch
B38 Rear window wiper control switch
B39 Trip odometer recall microswitch
B40 Trip odometer reset microswitch
B41 VF electronic rheostat
B42 Lamp dimmer rheostat
B43 Internal control switch for door unlock
B44 Rear spot light control switch

C: INSTRUMENTS

C1 Electronic rev-counter
C2 Electronic speedometer
C3 Voltmeter
C4 Fuel level gauge
C5 Oil pressure gauge
C6 Coolant temperature gauge
C7 Clock
C8 Space free for instrument
C9 Turbocharger air pressure gauge
C10 Cluster (*)
C11 ALFA ROMEO Control display
C12 Performance gauge display
C13 Optoelectronic cluster
C14 Warning lamp panel

(*) C10 a/b/c/d/e/f Cluster connectors

D: WARNING LAMPS

D1 Alternator warning lamp
D2 Direction indicator warning lamp
D3 Side light warning lamp
D4 Full beam warning lamp
D5 Brake fluid low level warning lamp
D6 Heater/ventilation warning lamp
D7 Handbrake warning lamp
D8 Fuel reserve warning lamp
D9 Choke warning lamp
D10 Handbrake ON - brake fluid level warning lamp
D11 Engine oil minimum pressure warning lamp
D12 Pre-heating glow plug warning lamp
D13 Engine coolant high temperature warning lamp
D14 Maximum air pressure warning lamp
D15 Minimum fuel pressure warning lamp
D16 Warning lamp free
D17 Gear position warning lamp
D18 Manual injection advance warning lamp
D19 Brake pad wear warning lamp
D20 Rear drive engagement warning lamp
D21 ALFA ROMEO Control warning lamp
D22 Heated rear window warning lamp
D23 Hazard lights warning lamp
D24 Rear fog light warning lamp
D25 Fog light warning lamp
D26 Injection diagnosis warning lamp

E: EXTERNAL LIGHTS

E1 Front direction indicator warning lamp
E2 Front side light
E3 Front direction indicator and side light
E4 Front side marker light
E5 Low beam light
E6 Low beam light with incorporated side light
E7 Full beam light
E8 Low and full beam light
E9 Side repeater
E10 Fog light

E: EXTERNAL LIGHTS (continued)

E11 Rear direction indicator
E12 Rear side marker light
E13 Rear side light
E14 Reversing light
E15 Stop light
E16 Rear fog lamp
E17 Numberplate light
E18 Stop and rear side light
E19 Rear right light
E20 Rear left light

F: INTERIOR LIGHTS

F1 Passenger compartment front roof lamp
F2 Passenger compartment rear roof lamp
F3 Passenger compartment roof lamp
F4 Engine compartment lamp
F5 Luggage compartment lamp
F6 Door open signalling light
F7 Fuse light
F8 Heater/ventilation controls lighting lamp
F9 Glovebox light
F10 Ashtray light
F11 Map light
F12 Cluster light
F13 Front spot
F14 Rear right spot
F15 Rear left spot
F16 Ignition switch light
F17 Switch illumination light
F18 Rear spot light

G: FUSEBOX - CONNECTORS - GROUNDS

G1 Fusebox
G2 Auxiliary fusebox
G3 Fusebox terminal
G4 Free fusebox
G5 Multiple connector
G6 Multiple connector B - cluster
G7 Multiple connector R - cluster
G8 Single connector
G9 Connector between front left door wiring and door mirror switch
G10 Connector between front right door wiring and door mirror switch
G11 Connector between board wiring and rear wiring
G12 Connector between board wiring and courtesy mirror switch
G13 Connector between board wiring and console wiring
G14 3-way connector between board wiring and door wiring
G15 2-way connector between board wiring and door wiring
G16 6-way connector between board wiring and door wiring
G17 Connector between board wiring and front right door wiring
G18 Connector between board wiring and front left door wiring
G19 Connector between board wiring and passenger compartment roof lamp
G20 Connector for front right door - locking motor
G21 Connector for front right door wiring
G22 Connector for front left door - locking motor
G23 Connector for front left door wiring
G24 Connector for rear right door - locking motor
G25 Connector for rear right door wiring
G26 Connector for rear left door - locking motor
G27 Connector for rear left door wiring
G28 Connector between front right door wiring and power window switch
G28a Connector between rear right door wiring and power window switch
G29 Connector between door lock wiring and rear power windows
G30 Connector for power windows and door lock
G31 Connector between front left door wiring and power window switch
G31a Connector between rear left door wiring and power window switch
G32 Connector between console wiring and rear right door wiring
G33 Connector between console wiring and rear left door wiring
G34 Connector for power window supply cable
G35 Connector between rear wiring and rear right tail light wiring
G36 Connector for power window switch cables
G37 Connector for multiswitch on steering column
G38 Connector for air conditioner wiring
G39 Connector for clock wiring
G40 Connector for door lock control unit
G41 Connector for tachymetric switch - rev counter pulse generator
G42 Connector between alternator and min engine oil pressure switch
G43 Connector for heater/ventilation control cables
G44 Connector for rear fog lamp
G45 Connector for headlight wash/wipe cables
G46 Connector for headlights
G47 Connector for right side - repeater cables
G48 Connector between electric door mirror and left side - repeater cables
G49 Connector available
G50 Provision for loud speaker cables
G51 Provision for car radio cables
G52 Fusebox ground
G53 Engine compartment ground
G53a Engine compartment ground - right side
G53b Engine compartment ground - left side
G54 Passenger compartment ground
G55 Hood ledge panel ground
G56 Branch terminal board
G57 Provision for fuel cut-off solenoid valve
G58 Connector for cigar lighter
G59 Connector for electric door mirror
G60 Injector wiring ground
G61 Connector for ignition coil
G62 Clutch switch connector
G63 Rear ground
G63a Rear right ground
G63b Rear left ground
G64 Connector for Trip Computer - clock
G65 Coaxial cable
G66 Motronic wiring ground
G67 Motronic connector
G68 Connector A with board wiring
G69 Connector B with board wiring
G70 Connector C with board wiring
G71 Connector for warning lamp on instruments

G: FUSEBOX - CONNECTORS - GRUNDS (continued)

G72 Connector for seat back adjustment wiring
G73 Connector for rear services
G73a Connector for right rear services
G73b Connector for left rear services
G74 Connectors between Televel rear wiring and ALFA ROMEO Control
G75 Connector between right and left roof panel services
G76 Connector for roof panel services - right side
G77 Connector for roof panel services - left side
G78 Connector for front door services wiring
G79 Connector for rear door services wiring
G80 Connector for board wiring
G81 Connector for front left seat back adjustment
G82 Connector for front right seat back adjustment
G83 Rear connector for fast idle device
G84 Console cable connector
G85 Front services connector
G86 Connector for passenger compartment roof lamp
G87 Connector for rear door - locking motors
G88 Connector for rear tail lights
G89 Intermediate connector A
G90 Intermediate connector B
G91 Rear door sensors ground
G92 Luggage compartment ground
G93 Windscreen frame upper cross member ground
G94 Engine compartment connector
G94a 10-way connector for engine compartment
G94b 8-way connector for engine compartment
G94c Engine compartment connector - right side
G94d Engine compartment connector - left side
G95 Central fusebox
G95A Connector for switches
G95B Connector for switches
G95C Connector for cluster warning lamps
G95D Connector for ALFA ROMEO Control
G95E Connector for console
G95F Connector for fog light - rear fog light
G95G Connector for combination switch
G95H Connector for LH interface
G95I Connector for RH interface
G95L Connector for clock - rheostats
G95M Connector for sun - roof
G95N Connector for battery
G95O Connector for ignition switch
G95P Connector for door services
G95Q Connector for performance gauge
G95R Connector for heated rear window
G95S Connector for cluster
G95V Fuses
G96 Single connector for ALFA ROMEO Control - cluster
G97 Connector for left doors services
G98 Connector for right doors services
G99a Connector for engine dashboard (A)
G99b Connector for engine dashboard (B)
G99c Connector for engine dashboard (C)
G99d Connector for engine dashboard (D)
G100 Connector for console - doors wiring
G101 Trip Computer connector
G102 Optoelectronic cluster connector
G103 Connector for grounds and brakes fluid tank
G104 Connector for roof panel left pillar
G105 Connector for ashtray lamp
G106 Seat grounds
G107 Connector for fuel pump
G108 CEM wiring ground
G109 Injection wiring connector
G110 Thermostat housing ground
G111 Connector for dashboard instruments wiring
G112a Connector A for roof wiring
G112b Connector B for roof wiring
G112c Connector C for roof wiring
G112d Connector D for roof wiring
G113 Connector for front left-hand fender
G114 Connector for outside temperature sensor
G115 Connector for tow bar vehicle socket
G116 Connector for tow bar trailer plug
G117 Connector for engine compartment lamp
G118 Connector for luggage compartment lamp

H: SWITCHES

H1 Handbrake switch
H2 Reversing light switch
H3 Stop light switch
H4 Courtesy light switch on pillar
H5 Left front door open indicator switch
H6 Right front door open indicator switch
H7 Left rear door open indicator switch
H8 Right rear door open indicator switch
H9 Right front brake pad switch
H10 Left front brake pad switch
H11 Right rear brake pad switch
H12 Left rear brake pad switch
H13 Choke switch
H14 Injection advance switch
H15 Gearbox oil low level switch (magnetic bulb)
H16 Starting and reverse inhibitor switch
H17 Brake fluid minimum level check switch
H18 Fast-idle switch in gearbox
H19 Low fuel pressure switch
H20 Inertia switch
H21 Clutch pedal fast-idle switch
H22 Ignition microswitch
H23 Engine compartment lamp switch
H24 Luggage compartment lamp switch
H25 Glovebox light switch
H26 Switch on rear door for rear screen wiper
H27 Switch on rear door for heated rear screen
H28 Carburettor contact/switch
H29 Switch for rear drive engagement warning lamp
H30 R.p.m. - activated microswitch
H31 Switch for idle r.p.m. adjusting screw on carburetor
H32 Microswitch on carburetor for inserting timing variator

I: RELAYS

I1 Engine cooling fan relay
I2 Heated rear window relay
I3 Horn relay
I4 Headlight wiper relay
I5 Auxialiary relay for headlight wiper timer
I6 Fast idle relay
I7 Fuel pipe closing relay
I8 Relay excluding retarded rotor arm
I9 Glow plug relay
I10 Starter inhibitor relay

I: RELAYS (continued)

I11 Front power window and seat raising relay
I12 Front power window relay
I13 Rear power window relay
I14 Brake fluid automatic warning lamp control relay
I15 Low fuel pressure warning light relay
I16 Headlight relay
I17 Fog light relay
I18 Double contact relay
I19 Headlight washer pump relay
I20 Beam change over relay
I21 Full beam exclusion relay
I22 Low beam exclusion relay
I23 Supplementary engine cooling fan relay
I24 Direction and hazard lights relay
I25 Rear fog light relay
I26 Roof lamp relay
I27 Seat height adjustment relay
I28 Hazard lights relay
I29 Fuel pump relay
I30 Relay with CEM diode
I31 Front power windows/heater relay
I32 Advance variation control unit relay
I33 Carburetor microswitch relay
I34 Rear fog light exclusion relay
I35 Key-operated supply relay
I36 Relay for brake wear and liquid level

L: SENDERS

L1 Low fuel pressure switch
L2 Low oil pressure switch
L3 Max air pressure switch
L4 Thermal switch for engine cooling electromagnetic coupling
L5 Thermal switch for engine coolant max temperature
L6 Thermal switch for engine cooling electric fan
L7 Engine coolant temperature gauge sender
L8 Oil pressure gauge sender
L9 Fuel level gauge sender
L10 Sender for engine coolant temperature gauge and max temperature warning lamp contact
L11 Retarded rotor arm cut-out pressure switch
L12 Engine oil level sensor
L13 Windscreen washing liquid level sensor
L14 Engine coolant level sensor
L15 Fuel flow sensor
L16 Rev counter impulse generator
L17 Speedometer pulse generator
L18 Load sender
L19 External temperature sensor
L20 Photoelectric cell
L21 Solenoid valve regulating the supercharging pressure
L22 Knocking sensor
L23 Potentiometer
L24 Coolant temperature sensor for ignition advance adjustment
L25 Thermal switch for engine coolant

M: SOLENOIDS - SOLENOID VALVES

M1 Fuel cut-off solenoid valve
M2 Injection pump solenoid valve
M3 Solenoid with injectio pump fuel cut-off microswitch
M4 Fast idle solenoid
M5 Engine stop solenoid
M6 Fuel pipe closing electromagnet
M7 Door opening/closing electromagnet
M8 Auxiliary air solenoid valve (for A/C equipped car)
M9 Pierburg solenoid valve (for idle r.p.m.)

N: ELECTRONIC DEVICES - INTERMITTENCES - TIMERS

N1 Electronic ignition module
N2 Connector for Marelli module
N3 Capacitor for electronic ignition
N4 Connector for Bosch module
N5 Tachymetric switch device
N6 Phare-heating glow-plug timer
N7 Trip Computer
N8 ALFA ROMEO Control
N9 Brake pad wear control unit
N10 Roof lamp timer
N11 Door lock control unit
N12 Headlight wiper timer
N13 Road hazard and direction indicators intermittence
N14 Electronic windscreen wiper intermittence
N15 Electronic windscreen wiper intermittence and warning light control
N16 Tachymetric control unit
N17 Trip control unit for fuel flow
N18 Electronic device for headlamps and flashing
N19 Performance gauge control unit
N20 Advance variation control unit
N21 Power module
N22 ALFA ROMEO Control control unit
N23 Ignition control unit
N24 Pulse converter

O: ANCILLARY EQUIPMENT

O1 Heated rear window
O2 Horn
O3 Electrically-operated antenna
O4 Radio
O5 Speaker
O6 Cigar lighter
O7 Rear cigar lighter

P: ELECTRIC MOTORS

P1 Windscreen wiper motor
P2 Engine cooling fan motor
P3 Engine cooling fan electromagnetic drive
P4 Headlight wiper motor

P: ELECTRIC MOTORS (continued)

P5 Front left seat adjustment motor
P6 Front right backrest adjustment motor
P7 Front left backrest adjustment motor
P8 Motor for electric door mirror - right side
P9 Motor for electric door mirror - left side
P10 Front right door locking motor
P11 Front left door locking motor
P12 Rear right door locking motor
P13 Rear left door locking motor
P14 Front right power window motor
P15 Front left power window motor
P16 Rear right power window motor
P17 Rear left power window motor
P18a Fuel electric pump
P18b Auxiliary fuel electric pump
P19 Windscreen washer pump
P20 Headlight washer pump
P21 Rear window wiper motor
P22 Rear window washer pump motor
P23 Supplementary engine cooling fan motor

Q: HEAT/VENT - AIR CONDITIONING SYSTEM

Q1 Heater/ventilation electric fan
Q2 Pneumatic pushbutton control for air conditioning
Q3 Pneumatic pushbutton control for ventilation
Q4 Heater/ventilation electric fan control
Q5 Heater blower fan speed adjustment resistance
Q6 Switch on flap for heater blower fan
Q7 Fluid thermostat
Q8 Electromagnetic coupling pressure switch
Q9 Minimum pressure switch
Q10 Maximum pressure switch
Q11 Compressor electromagnetic coupling
Q12 Thermoswitch for exclusion of compressor electromagnetic coupling
Q13 Supplementary conditioner fan
Q14 Relay for supplementary conditioner fan and electromagnetic compressor coupling
Q15 Heater/ventilation electric fan relay
Q16 Relay for simultaneous control of engine cooling fan and supplementary fan
Q17 Relay for simultaneous control of engine cooling electromagnetic coupling and supplementary fan
Q18 Heater
Q19 Cooler
Q20 Min and max pressure switch (Trinary)

R: SAFETY DEVICES

R1 Seat belt device
R2 Catalytic converter temperature indicator
R3 Thermocouple for catalytic converter temperature detection
R4 Unfastened seat belt buzzer
R5 Open door buzzer
R6 Mileometer
R7 Seat belt warning lamp
R8 30,000 mile warning lamp
R9 Switch on seat belts
R10 Catalytic converter maximum temperature warning light

S: ELECTRONIC FUEL INJECTION

S1 Injection control unit
S2 Relay set
S3 Electroinjectors
S4 Cold start-up electroinjector
S5 Air flow gauge
S6 Throttle switch
S7 Engine coolant temperature sensor
S8 Thermo-time switch
S9 Auxiliary air valve
S10 CO^2 sensor (λ)
S11 Motronic Control unit
S12 Motronic relay
S13 Timing sensor
S14 Rev sensor
S15 Timing variator device
S16 Altitude air regulator
S17 CEM control unit
S17A CEM Control unit white connector
S17B CEM control unit black connector
S18 Throttle angle sensor
S19 Hall sensor
S20 Deton sensor
S21 Throttle actuator
S22 Electroinjector terminal
S23 Electroinjector resistor
S24 Electroinjector terminal board
S25 Autodiagnosis connector
S26 Injection system

VARIATIONS 1.8-2.0 CH SWE

IGNITION CONTROL UNITS

LOCATION

It is housed in the engine compartment, on the front right-hand side of dashboard sheet panel.

REMOVAL AND INSTALLATION

1. Unscrew the screw securing relay (2), and detach it from the support.
2. Unscrew the two screws shown in the figure, and disconnect control unit (1) from support.

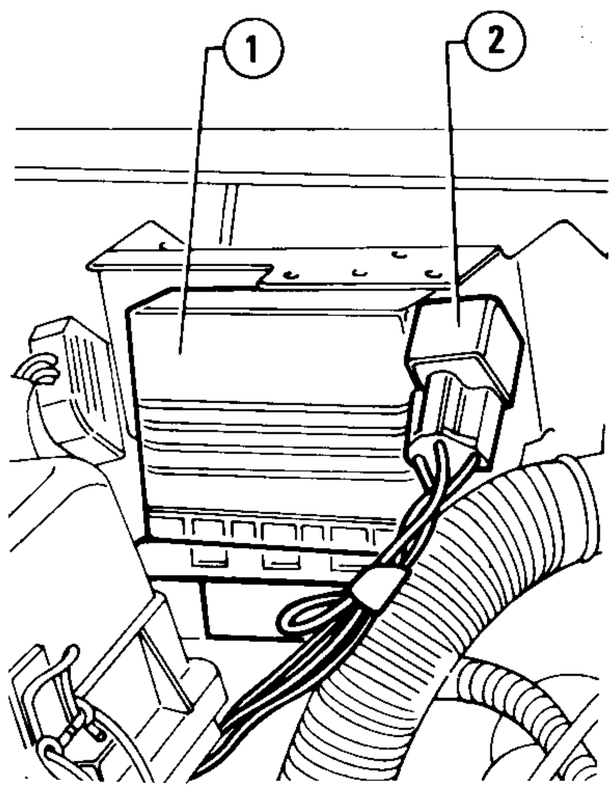

1 Ignition control unit
2 Timing variator relay

3. Operating as shown in the figure, move lever securing the multiple conductor connector (1) to ignition control unit (2); remove the control unit.

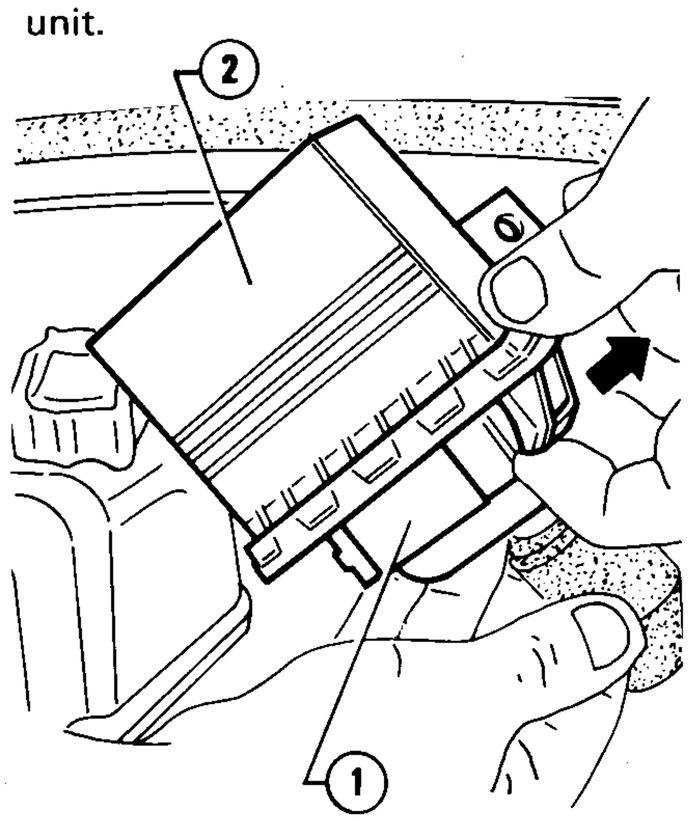

1 Multiple conductor connector
2 Ignition control unit

4. Insert tab (1) of multiple conductor connector into its seat on the electronic control unit, then move lever (2), as per figure, and insert connector.

CAUTION:
Make sure that connector is correctly inserted in the control unit.

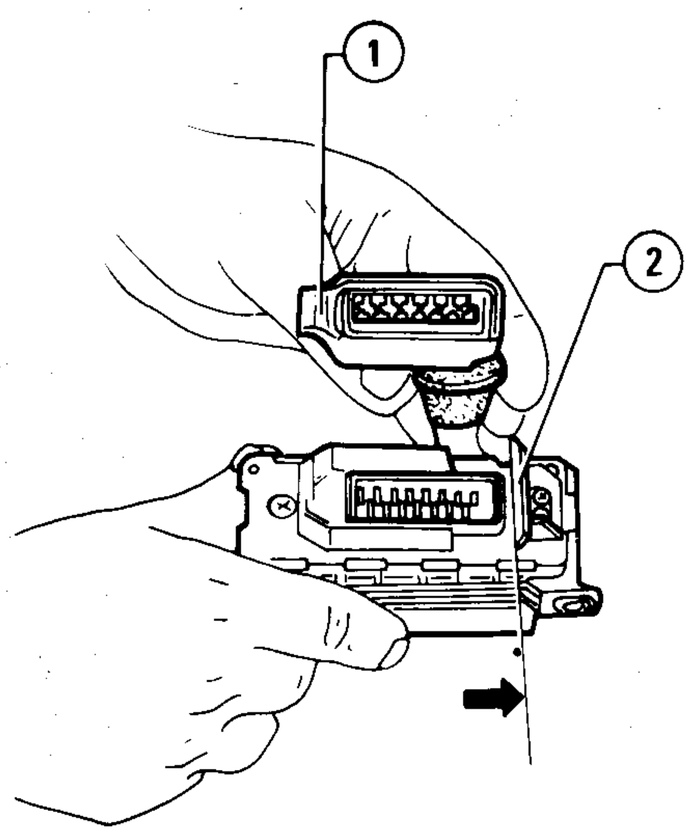

1 Tab 2 Lever

5. Re-position the control unit on the related support, then secure it with two screws.
6. Reconnect the timing variator relay to support.

TIMING VARIATOR RELAY

LOCATION

It is in correspondence with the electronic control unit on the front right-hand side of dashboard sheet panel.

REMOVAL AND INSTALLATION

Refer to: "Ignition Control Unit".

CAUTION:
Relay must be of the type shown in the figure.

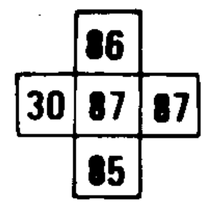

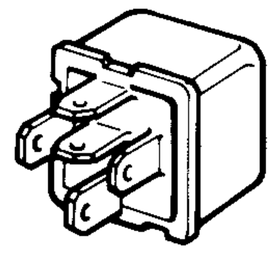

COOLANT TEMPERATURE SWITCH

LOCATION

The ON-OFF type switch is housed on head, between 3rd and 4th cylinder.

CHECK

1. On cold engine, detach supply connector.
2. Set the ends of a tester between switch terminal and ground. Verify that circuit is closed (tester indicates 0 Ω).
3. Start the engine, bring it to normal running temperature, then switch it off.
4. Set the ends of a tester between switch terminal and ground. Verify that circuit is open (tester indicates ∞).

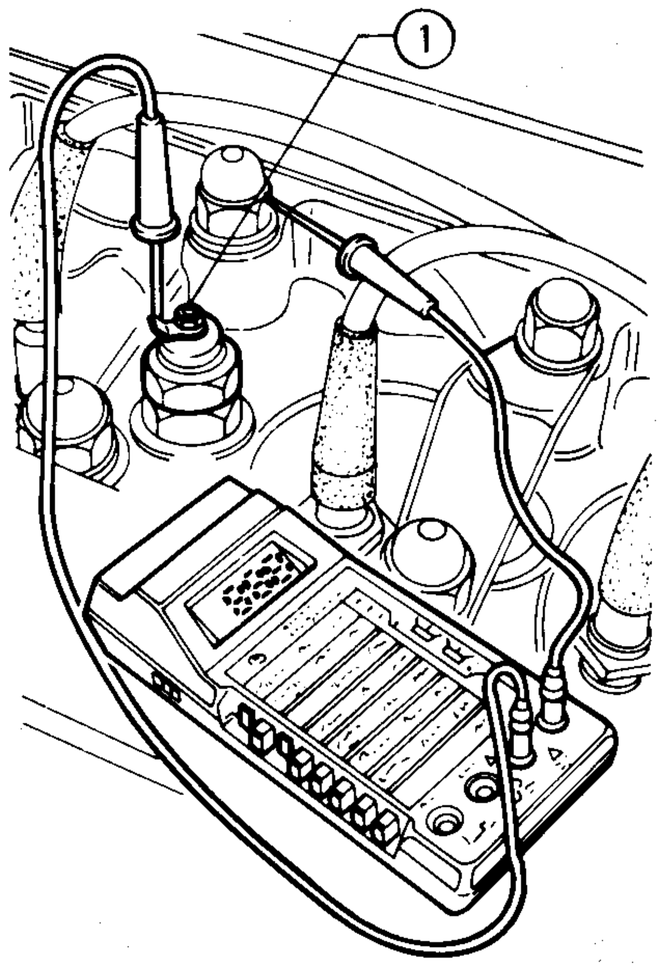

1 Coolant temperature switch

5. If the values are not those indicated, replace the switch.

(T) : **Tightening torque**
Switch on cylinder head
20 to 25 N·m
(2 to 2.5 kg·m
14.46 to 18.08 ft·lb)

R.P.M. - ACTIVATED MICROSWITCH

LOCATION

The ON-OFF type switch is located on the front side of front carburetor; it is activated by a cam connected to throttle valves shaft.

REMOVAL

1. Disconnect cable (3).
2. Unscrew the two screws shown in the figure and remove microswitch (2) from carburetor, together with support plate (1).

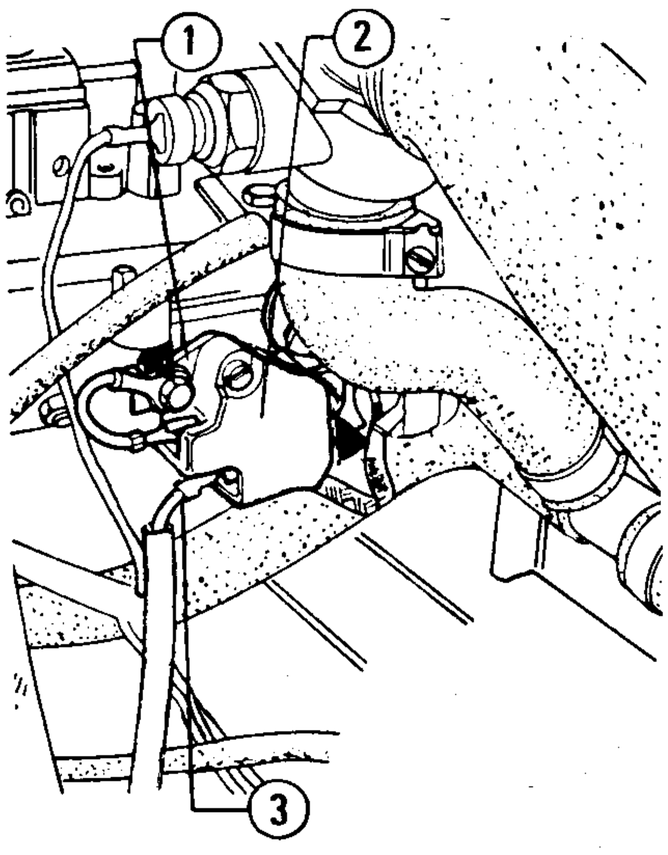

1 Microswitch support plate
2 R.p.m. - activated microswitch
3 Supply cable

CHECKS AND INSPECTIONS

1. Place the ends of a tester between input and output of microswitch, and verify that circuit is open (tester indicates: ∞).
2. Push lever (1) and verify that circuit is closed (tester indicates: 0 Ω).

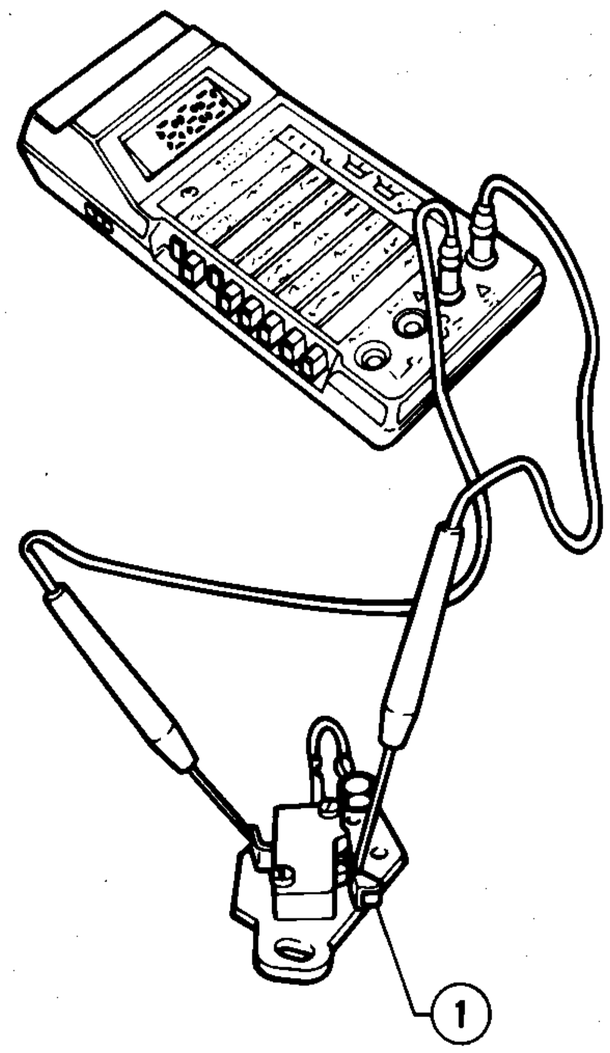

1 Microswitch operating lever

3. If the values are not those indicated, separate microswitch from the support, by operating the screws shown in the figure, and replace it.

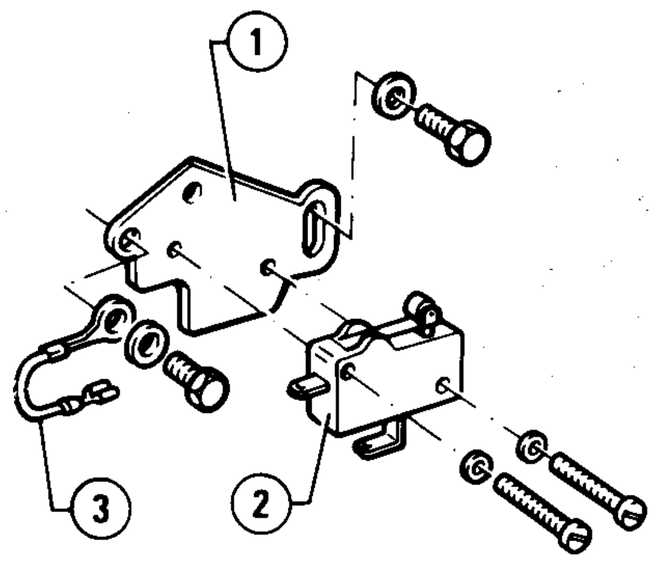

1 Support
2 Microswitch
3 Ground cable

INSTALLATION

Carry out installation by reversing the order of removal.
Once carried out the operation, adjust the microswitch (refer to: Group 00 - Fuel System - R.p.m. activated microswitch **1.8** (CH) (SWE) **2.0** (CH) (SWE)

LOCATION

The ON-OFF type switch is part of the idle r.p.m. adjusting screw. It is located on the rear carburetor.

REMOVAL AND INSTALLATION

1. Detach supply connector.
2. Unscrew the idle r.p.m. adjusting screw (1) until withdrawing it together with spring (2) and support (3).
3. Check components efficiency and, particularly, that therminal is not oxidized.

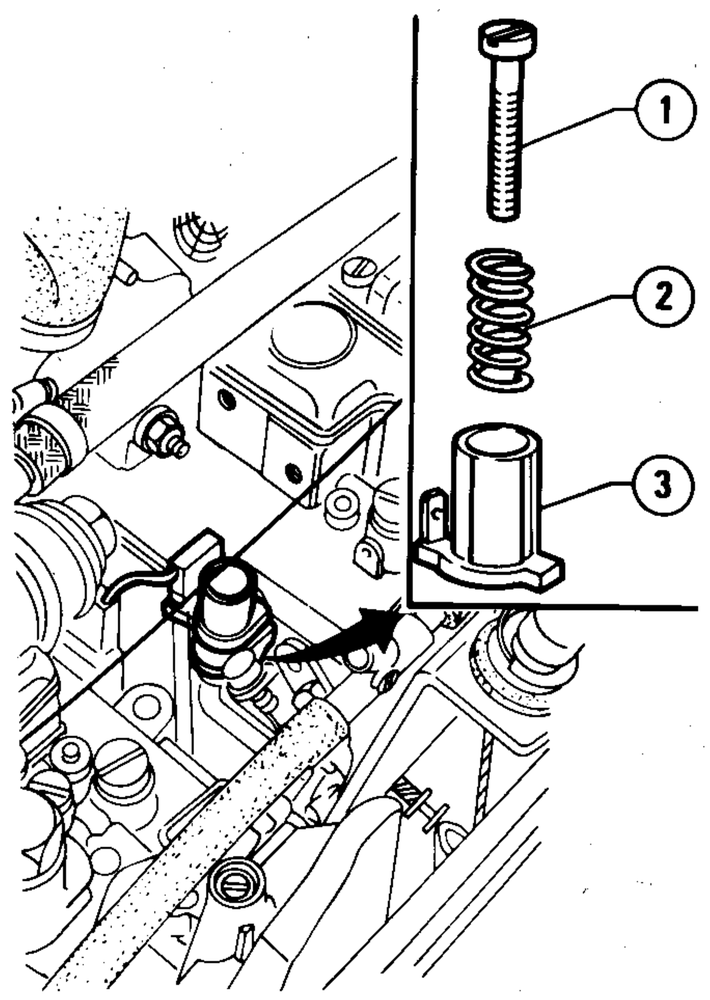

1 Idle r.p.m. adjusting screw
2 Spring
3 Support

4. Carry out installation by reversing the order of removal.
Once carried out the operation, adjust the idle r.p.m., by strictly following the procedure given in Group 00 - Fuel System - Check and Adjustment of Idle r.p.m. and Exhaust Emissions **1.8** (CH) (SWE) **2.0** (CH) (SWE)